WHITE—DIVISION OF WATER RESOURCES
CANARY—CLIENT'S COPY
PINK—WELL DRILLER'S COPY

PRINT OR TYPE ONLY
DO NOT WRITE ON BACK

STATE OF NEVADA
DIVISION OF WATER RESOURCES

WELL DRILLER'S REPORT

Please complete this form in its entirety in accordance with NRS 534.170 and NAC 534.340

OFFICE USE ONLY
Log No. 109890
Permit No.
Basin 139 pg 1 of 2

NOTICE OF INTENT NO. 59742

1. OWNER Idaho General Mines
MAILING ADDRESS 455 8th Street
Elko, NV 89801

ADDRESS AT WELL LOCATION Kobeh Valley
4,399,457.289 North / 562,056.197 East = NAD27

2. LOCATION SW ¼ NE ¼ Sec. 30 T. 22 N/S R. 51 E. Eureka County
PERMIT NO. MO-1458 (Issued by Water Resources) Parcel No. Kobeh Valley - Basin 137 (Subdivision Name)

3. WORK PERFORMED
☒ New Well ☐ Replace ☐ Recondition
☐ Deepen ☐ Abandon ☐ Other

4. PROPOSED USE
☐ Domestic ☐ Irrigation ☐ Test
☐ Municipal/Industrial ☒ Monitor ☐ Stock

5. WELL TYPE
☐ Cable ☒ Rotary ☐ RVC
☐ Air ☐ Other

6. LITHOLOGIC LOG

Material	Water Strata	From	To	Thickness
Hard Clay		0	68	68
Consolidated Sands & gravel	92	68	800	732
N 39.744646 (XA)				
W 116.275717 NAD27				
SWL shallow =				
SWL deep =				
Drilled right next to 8 inch well under same NDI				

Date started 8/22/07, 20
Date completed 8/27/07, 20

7. WELL TEST DATA
TEST METHOD: ☐ Bailer ☐ Pump ☐ Air Lift

GPM	Draw Down (Feet Below Static)	Time (Hours)

8. WELL CONSTRUCTION
Depth Drilled 800 Feet Depth Cased 800 Feet

HOLE DIAMETER (BIT SIZE)

Inches	From Feet	To Feet
8.5	0	800

CASING SCHEDULE

Size O.D. (Inches)	Weight/Ft. (Pounds)	Wall Thickness (Inches)	From (Feet)	To (Feet)
2" SCH 80 PVC			+1	760
2" SCH 80 PVC			+1	100

Perforations:
Type perforation Factory Slotted
Size perforation .020
From 760 feet to 800 feet
From 100 feet to 140 feet
From feet to feet
From feet to feet
From feet to feet

Surface Seal: ☒ Yes ☐ No
Depth of Seal ~~755/95~~ 0-95, 140-755
Placement Method: ☒ Pumped ☐ Poured
Seal Type: ☐ Neat Cement ☒ Cement Grout ☐ Concrete Grout
Gravel Packed: ☒ Yes ☐ No
95-140' 755-800
From ~~755/95~~ feet to ~~800/140~~ feet

9. WATER LEVEL
Static water level 92 feet below land surface
Artesian flow G.P.M. P.S.I.
Water temperature °F Quality

10. DRILLER'S CERTIFICATION
This well was drilled under my supervision and the report is true to the best of my knowledge.
Name WDC Exploration & Wells (Contractor)
Address 570 Corinthian Way (Contractor)
N. Las Vegas, NV 89030
Nevada contractor's license number issued by the State Contractor's Board 0012852
Nevada driller's license number issued by the Division of Water Resources, the on-site driller 2057
Signed (By driller performing actual drilling on site or contractor)
Date 10-1-07

RECEIVED 2008 JUN 25 AM 10:39 STATE ENGINEER'S OFFICE

USE ADDITIONAL SHEETS IF NECESSARY

(Rev. 12-01) (O)-627

Log# 109890
pg 2 of 2

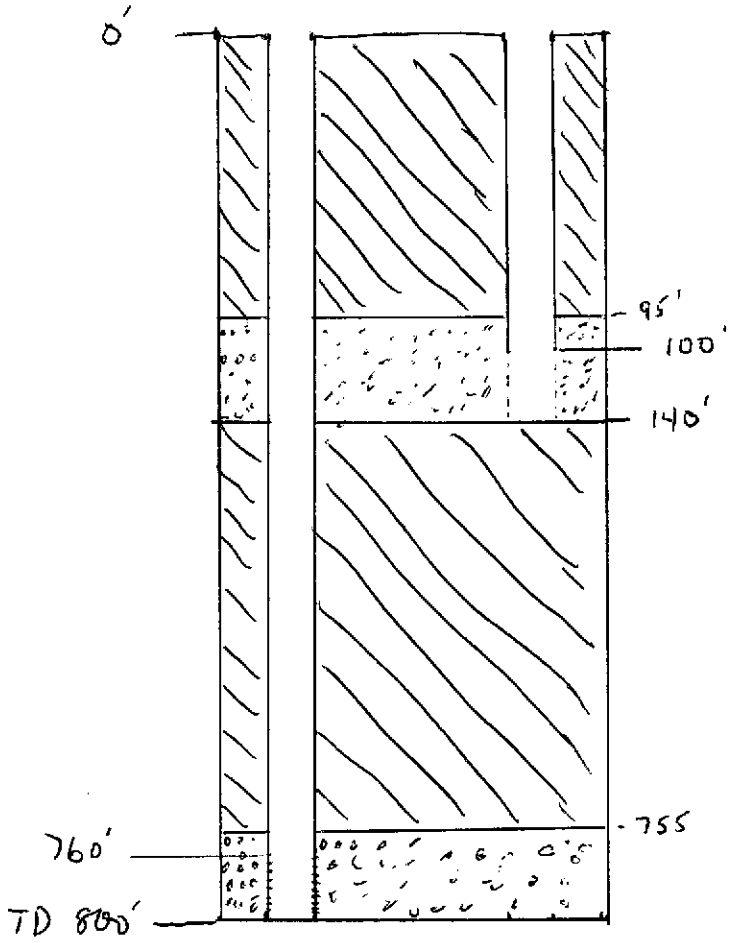

RECEIVED
2008 JUN 25 AM 10: 39
STATE ENGINEERS OFFICE