WHITE—DIVISION OF WATER RESOURCES
CANARY—CLIENT'S COPY
PINK—WELL DRILLER'S COPY

PRINT OR TYPE ONLY
DO NOT WRITE ON BACK

STATE OF NEVADA
DIVISION OF WATER RESOURCES
WELL DRILLER'S REPORT
Please complete this form in its entirety in accordance with NRS 534.170 and NAC 534.340

OFFICE USE ONLY
Log No. 83386
Permit No.
Basin 108

NOTICE OF INTENT NO. 40752

1. OWNER US Army Hawthorne Army Depot ADDRESS AT WELL LOCATION
MAILING ADDRESS 1-S Maine St
Hawthorne NV. 89415-9404

2. LOCATION Sw ¼ NE ¼ Sec. 11 T. 8 N/S R. 30 E. Mineral County
PERMIT NO. F-D NW 6-30032
Issued by Water Resources | Parcel No. | Subdivision Name

3. WORK PERFORMED: ☒ New Well ☐ Replace ☐ Recondition ☐ Deepen ☐ Abandon ☒ Other Vapor

4. PROPOSED USE Vapor extr.: ☐ Domestic ☐ Irrigation ☐ Test ☐ Municipal/Industrial ☒ Monitor ☐ Stock

5. WELL TYPE: ☐ Cable ☐ Rotary ☐ RVC ☐ Air ☒ Other Auger

6. LITHOLOGIC LOG SB-4

Material	Water Strata	From	To	Thickness
Silty Sand		0	5	5
Gravelly Fine Sand		5	10	5
Med to Coarse Sand		10	15	5
Coarse Gravelly Sand		15	20	5
Sandy Gravel		20	25	5
Fine Sand		25	30	5
Red Clay		30	35	5
Fine loose Sand		35	40	5
Med. to Coarse Sand		40	45	5
Brown Clay		45	50	5
Coarse Gravelly Sand		50	55	5
Gravel - coarse Sand		55	60	5
Silty Clay		60	65	5
Silty Brown Clay		65	70	5
Medium Fine Sand		70	75	5
Loose Fine Sand		75	80	5
Tan Orange Clay		80	85	5

Date started 2-7-2001
Date completed 2-7-2001

7. WELL TEST DATA
TEST METHOD: ☐ Bailer ☐ Pump ☐ Air Lift

G.P.M.	Draw Down (Feet Below Static)	Time (Hours)
	NA	

8. WELL CONSTRUCTION
Depth Drilled 85 Feet Depth Cased 75 Feet

HOLE DIAMETER (BIT SIZE)

		From	To
8 Inches		0 Feet	85 Feet
Inches		Feet	Feet
Cement Inches		75 Feet	85 Feet

CASING SCHEDULE

Size O.D. (Inches)	Weight/Ft. (Pounds)	Wall Thickness (Inches)	From (Feet)	To (Feet)
2½		Sch 40 PVC	0	45

Perforations:
Type perforation Mill Slot
Size perforation .020
From 45 feet to 75 feet
From feet to feet
From feet to feet
From feet to feet
From feet to feet

Surface Seal: ☒ Yes ☐ No
Depth of Seal 39'
Placement Method: ☒ Pumped ☐ Poured
Seal Type: ☒ Neat Cement ☐ Cement Grout ☐ Concrete Grout
Bentonite Chips 39-44
Gravel Packed: ☒ Yes ☐ No
From 75 feet to 44 feet

9. WATER LEVEL
Static water level NA feet below land surface
Artesian flow G.P.M. P.S.I.
Water temperature °F Quality

10. DRILLER'S CERTIFICATION
This well was drilled under my supervision and the report is true to the best of my knowledge.
Name Water Development (Contractor)
Address P.O. Box 141 (Contractor)
Zamora CA 95698
Nevada contractor's license number issued by the State Contractor's Board 0012852
Nevada driller's license number issued by the Division of Water Resources, the on-site driller 2111
Signed James Whelley (By driller performing actual drilling on site or contractor)
Date 3-1-01

(Rev. 3-91) USE ADDITIONAL SHEETS IF NECESSARY (O)-627

Cold, windy, snowing

TETRA TECH, INC.
FIELD LOG OF BORING

Boring #: SB 04
Sheet 1 of 4

Project Name and Location: Bldg 336 Phase 3 G.W. invest.			TC Number: 11377-02-02
Elevation: ~4000	Date and Time Started: 2/7/01 @ 10:00		Date and Time Completed: 2/7/01 @ 16:30
Completion Depth: 85 feet bgs	Samples:	Drive:	1-liter: VOA: Other:
Boring Diameter & Drilling Method: 8 inch hollow stem auger	Water Level:	First (date/time):	Second (date/time):
Sample Type: Continuous Core	Hammer Wt.:	Drop:	Boring Location: near S.E corner of vent field.
Drilling Co: Water Dev. Co.	Driller: Jimmy		Geologist:

Depth (ft.)	Sample No.	Sample Interval	Recovery	Blow Count	Description	Graphic Symbol	USCS Symbol	Estimated % of Gr	Sa	Si	Cl	P.I.D. Reading	Comments
0	0-5		18"		mixed road grade aggregate first 5 inches then orange to tan poorly sorted silt-sand and gravel			20	50	20	10	1.0	~~near 0 ccc~~ Rem
3	5-10		22"		orange-tan gravelly fine to medium sand. Slightly damp and very poorly indurated.			20	70	10		0	
5	10-15		47"		Finely bedded medium and coarse sand with siltly clay cm scale interbeds for first 22 inches of interval Sharp basal contact with underlying gravelly coarse sand. Green clay layer for last 3 inches			10	70	10	10	0.8	
7												0	
10	15-20		14"		Coarse gravelly sand, dry and loose.			30	60	10		0	
12	20-25		28"		Sandy gravel (clasts up to 2.5 inch dia.) for first 6 inches. Sharp basal contact with underlying interbedded fine, med. and coarse sand. Interval is loose to poorly indurated			20	70	10		0	

BORING LOG FORM

Boring #: SB 04
Sheet 2 of 4

Project Name and Location: Bldg 336
TC Number: 11377-02-02

Depth	Sample No.	Sample Interval	Recovery	Blow Count	Description	Graphic Symbol	USCS Symbol	Estimated % of Gr	Sa	Si	Cl	P.I.D. Reading	Comments
	25-30		50"		Very fine, well sorted sand first 4 inches then silty, finely bedded clay to 24" of interval. Sharp contact to underlying fine to medium coarsely bedded sand, orange-tan in color, poorly indurated	→ light tan → olive green mod. indurated			60	20	20	137	Sample SB04-01 11:25 ~26' bgs
	30-35		45"		Silty bedded olive to red clay first 8 inches then sharp contact to gravelly coarse sand with orange stain zones and cm scale silty clay beds. Last 8 inches interbedded green clay and light tan fine sand. Middle of interval is loose, top and bottom mod. indurated.			5	50	20	25	22	Sample SB04-2 @ ~34' bgs 11:45
	35-40		50"		well sorted fine, loose sand with sparce cm scale silty clay interbeds for first 18 inches. Gradational basal contact with underlying clayey fine sand for (olive to tan) next 20 inches of interval. Last 12 inches: poorly sorted clayey coarse sand with cm scale clay (pink) interbeds. Interval is mod. indurated.				50	20	30	35	Sample 3 @ 38 bgs 12:00
	40-45		26"		Interbedded loose medium to coarse sand. Local iron oxide stained zones			10	90	10		12	

BORING LOG FORM

Boring #: SB 04
Sheet 3 of 4

Project Name and Location: Bldg 336 SB 04
TC Number: 11377-02-02

Depth	Sample No.	Sample Interval	Recovery	Blow Count	Description	Graphic Symbol	USCS Symbol	Estimated % of Gr	Sa	Si	Cl	P.I.D. Reading	Comments
	45-50		27"		Greenish-brown silty clay with sparse coarse gravel (up to 3 inch dia), and sandy interbeds (coarse to fine. Interval is damp and mod. indurated.			10	30	40	20	72.0	Sample SB04-[illegible] 46 bgs 13:30
	50-55		24"		Coarse, loose gravelly sand for first 16 inches of interval. Sharp base contact with underlying well sorted fine sand to clayey sand (PID of 362 sample SB04-05)			20	50	20	10	362	Sample SB04-05 @ ~54' bgs 13:50
	55-60		20"		Loose, poorly sorted gravelly, coarse sand. Slightly damp, loose. Sandy clay last 2 in. of interval, olive brown with a .5 cm thick organic looking black layer. Sample 06 from highest PID reading in sand.			10	60	10	20	1705	Sample SB04-06 @ ~58 bgs 14:20
	60-65		55"		Silty massive clay. Red brown to 48" then olive green. 225 PID @ end of interval.				10	10	80	225	Sample 07 @ ~64 bgs 14:35
	65-70		40"		Silty light brown clay with cm scale fine sand interbeds and one 4 cm thick bright white silty layer (vole. ash??). Damp - mod. indurated. Last 6 inches of interval is an brick-red calcareous				20	20	60	1120	Sample 08 15:17 ~68' bgs

BORING LOG FORM

Boring #: SB 04
Sheet 4 of 4

Project Name and Location: Bldg. 336 SB 04
TC Number: 11377-02-02

Depth	Sample No.	Sample Interval	Recovery	Blow Count	Description	Graphic Symbol	USCS Symbol	Estimated % of Gr	Sa	Si	Cl	P.I.D. Reading	Comments
	65-70 (cont)				Sandstone, mod. to completely indurated (calcareous cement) PID readings 100-200 down though clay and 1120 in red sandstone (sample SB-04-08-S)								
	70-75		40"		medium fine sand with cm scale silty clay and indurated sandstone interbeds. Interval is damp @ bottom. Calcareous throughout, weakly to strongly indurated				70	15	15	30	
	75-80		32"		Well sorted, loose fine Sand. ~~Poorly~~ Damp.				80	10	10	80	sample SB 04-09 @ 76' bgs 15:50
	80-85		60"		Massive tan to tan-orange Clay with cm scale sandy clay interbeds. Interval is damp				10	10	80	15	

END OF HOLE

Robert D. [illegible]
2/7/01

Monitoring Well Construction Data
Hawthorne Army Depot, Hawthorne, Nevada

Vapor ~~Monitoring~~ Well: SB 04 Date: 2/7/01

Date of well construction: 2/7/01 Time of well construction: 18:30
Reference elevation during construction: ~4000'
Depth ground water first encountered: ~80 feet bgs (no saturated zone seen)
Depth of static ground water before construction: ~80 feet bgs
Depth of static ground water after construction:
Boring depth: 85 feet bgs Casing length: ~85 feet
Borehole diameter: 8 inch Well casing diameter: 2 inch

Blank Casing:
Type
Material PVC
Interval 45 feet bgs to surface
Joint type flush thread

Screen Casing:
Type
Material PVC
Interval 75 feet bgs to 45 feet bgs
Slot size/design 0.02

Centralizer Depths: none

Filter Pack:
Material High Quality Silica Sand
Gradation
Size #3
Volume actual 13 ft³
Interval
Uniformity coefficient
Volume calculated 9.92 ft³
Placement method poured through auger

Transition Sand:
Material
Gradation
Size
Volume actual
Interval
Uniformity coefficient
Volume calculated
Placement method

Annular Sealant:
Material bentonite chips
Volume calculated
Placement method
Interval 44 feet bgs to 39 feet bgs
Volume actual

Grout:
Material cement with 1% bentonite
Volume calculated
Placement method tremie pipe
Interval 39 feet bgs to ~6 feet bgs
Volume actual 106 gallons
Grouted on 2/8/01 ~8:00 to 9:30

Comments: Bore hole must be more like 9 inch diameter to account for the sand volume actual being ~35% more than calculated.

Monitoring Well Construction Sheet
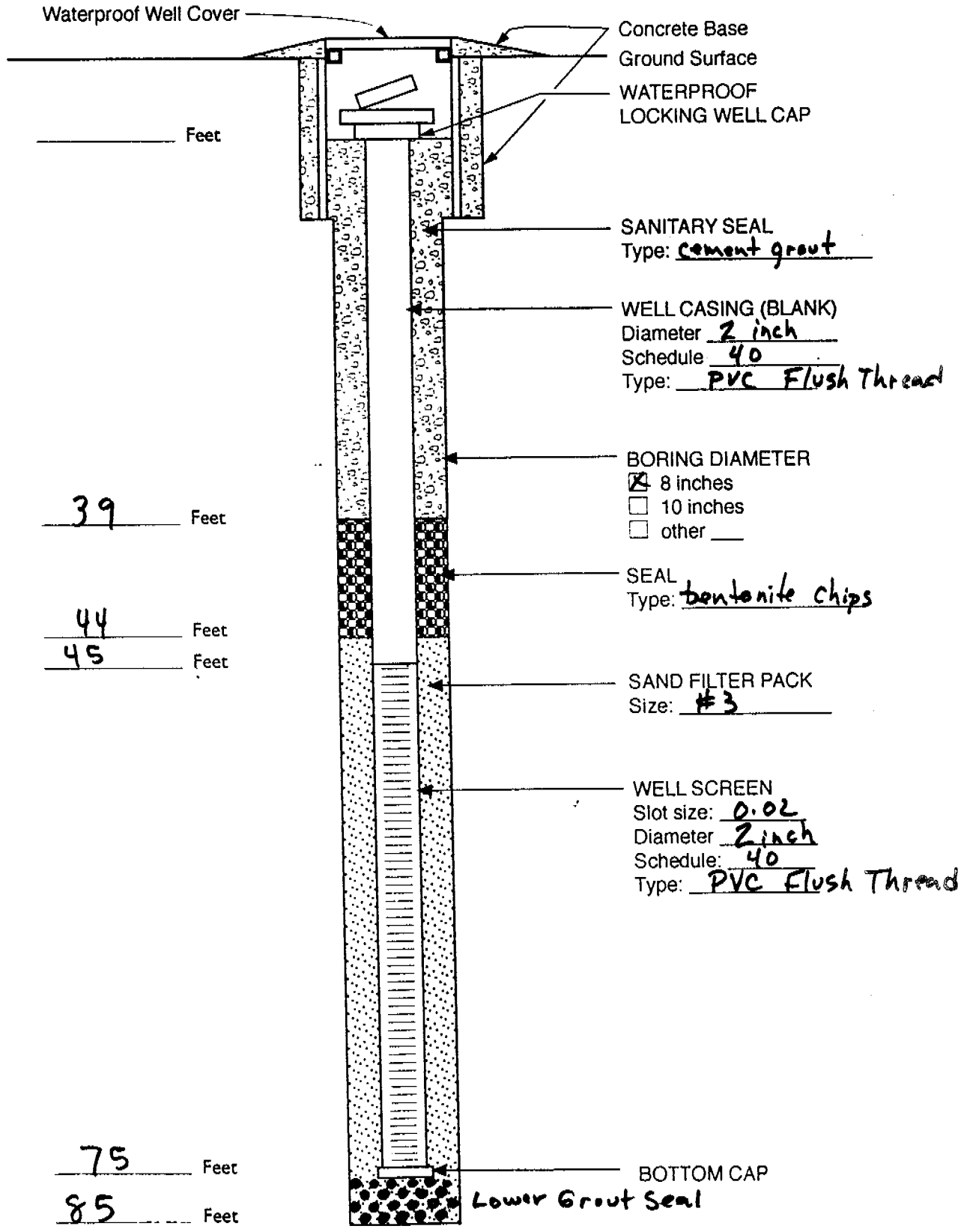
Project: Bldg. 336 Phase 3 Ground Water Invest.
Date: 02/07/01
Project No.: 11377-02-02
Driller: W.D.C. - Jimmy F.
Well Number: SB 04
Drilling Method: Hollow Stem Auger
Field Geologist: R. Marvin
Registered Geologist: _____