WHITE—DIVISION OF WATER RESOURCES
CANARY—CLIENT'S COPY
PINK—WELL DRILLER'S COPY

PRINT OR TYPE ONLY
DO NOT WRITE ON BACK

STATE OF NEVADA
DIVISION OF WATER RESOURCES

WELL DRILLER'S REPORT

Please complete this form in its entirety in accordance with NRS 534.170 and NAC 534.340

OFFICE USE ONLY
Log No. 83383
Permit No.
Basin 100

NOTICE OF INTENT NO. 40392

1. OWNER US ARMY Hawthorne Army Depot
MAILING ADDRESS 1 S. Maine ST
Hawthorne NV 89415-9401
ADDRESS AT WELL LOCATION

2. LOCATION ~~SW~~ ¼ ~~NE~~ ¼ Sec. 5 T. 8 N/S R. 30 E. Mineral County
PERMIT NO. 40392 (Issued by Water Resources) | Parcel No. 6-30032 | Subdivision Name

3. WORK PERFORMED
☒ New Well ☐ Replace ☐ Recondition
☐ Deepen ☐ Abandon ☐ Other

4. PROPOSED USE
☐ Domestic ☐ Irrigation ☐ Test
☐ Municipal/Industrial ☒ Monitor ☐ Stock

5. WELL TYPE
☐ Cable ☐ Rotary ☐ RVC
☐ Air ☒ Other Auger

6. LITHOLOGIC LOG MW13

Material	Water Strata	From	To	Thickness
Silty Sand		0	5	5
Medium Sand		5	10	5
Course Sand		10	15	5
Course Sand		15	20	5
Course to Fine Sand		20	25	5
Massive + medium Sand		25	30	5
Fine Sand		30	35	5
Mixed Medium Sand		35	40	5
Course Gravel		40	45	5
Medium Sand to silty Sand		45	50	5
Course Gravelly Sand		50	55	5
Silty Clay/Course Sand		55	60	5
Silty Clay		60	65	5
Gravelly Sand		65	70	5
Clayey Gravel		70	75	5
Silty Fine Sand		75	80	5
Fine Sand		80	85	5
Fine Sand		85	90	5
Silty Clayey Sand	✓	90	95	5
Fine Sand	✓	95	100	

Date started 1-29, 2001
Date completed 1-31, 2001

7. WELL TEST DATA
TEST METHOD: ☐ Bailer ☐ Pump ☐ Air Lift

	G.P.M.	Draw Down (Feet Below Static)	Time (Hours)
Bailer	2	Bailed Dry	

8. WELL CONSTRUCTION
Depth Drilled 100 Feet Depth Cased 97 Feet

HOLE DIAMETER (BIT SIZE)

		From	To
10 Inches		0 Feet	97 Feet
8" Inches		0 Feet	100 Feet
Inches		Feet	Feet

CASING SCHEDULE

Size O.D. (Inches)	Weight/Ft. (Pounds)	Wall Thickness (Inches)	From (Feet)	To (Feet)
4½		Sch 40	0	77

Perforations:
Type perforation Mill Slot
Size perforation 020
From 77 feet to 97 feet
From feet to feet
From feet to feet
From feet to feet
From feet to feet

Surface Seal: ☒ Yes ☐ No
Depth of Seal 67
Placement Method: ☐ Pumped ☐ Poured
Seal Type: ☒ Neat Cement ☐ Cement Grout ☐ Concrete Grout
Bentonite Chips 67-72
Gravel Packed: ☒ Yes ☐ No
From 97 feet to 72 feet

9. WATER LEVEL
Static water level 84 feet below land surface
Artesian flow G.P.M. P.S.I.
Water temperature °F Quality

10. DRILLER'S CERTIFICATION
This well was drilled under my supervision and the report is true to the best of my knowledge.
Name Water Development Corp (Contractor)
Address PO Box 141 (Contractor)
Zamora CA 95698
Nevada contractor's license number issued by the State Contractor's Board 0012952
Nevada driller's license number issued by the Division of Water Resources, the on-site driller 2111
Signed James Whitley (By driller performing actual drilling on site or contractor)
Date 3-1-01

(Rev. 3-91) USE ADDITIONAL SHEETS IF NECESSARY (O)-627

TETRA TECH, INC.
FIELD LOG OF BORING

Boring #: MW 13
Sheet 1 of

Project Name and Location: BLDG 336			TC Number: 11377-0202
Elevation: ~ 4000	Date and Time Started: 1/29/01 16:10		Date and Time Completed: 1/30/01 11:00
Completion Depth: 100' bgs	Samples:	Drive:	1-liter: VOA: Other: 4 1 1/2" sleeves
Boring Diameter & Drilling Method: 8" OD HSA Coring	Water Level:	First (date/time):	Second (date/time):
Sample Type: Cont. Core	Hammer Wt.:	Drop:	Boring Location: Near NE corner bldg 102-52
Drilling Co: Water Dev. Corp	Driller: Jimmy		Geologist: B. Marvin Tt

Depth (ft.)	Sample No.	Sample Interval	Recovery	Blow Count	Description	Graphic Symbol	USCS Symbol	Estimated % of Gr	Sa	Si	Cl	P.I.D. Reading	Comments
0	0-5		14"		8" concrete (pre-drilled) silty sand, massive, poorly sorted, ~~loose~~ loose. 2 cm thick clay layer @ bottom of interval. Damp				60	30	10	Ø	
1													
2													
3													
4	5-10		24"		Medium sand with cm. scale clay layers, gradational contact with underlying coarse silty sand. Interval is loose and damp. Tan-orange color					60	30	10	Ø	
5													
6													
7	10-15		30"		Coarse sand with rounded gravel, sharp transition to fine well sorted sand, fist size cobble, cont. fine sand sharp contact with coarse sand. All lithologies are damp and loose.			10	70	10	10	1.6	Black, sticky substance @ start of interval
8													
9													
10													
11													
12	15-20		36"		Coarse sand with cm scale fine sand interbeds for first 20 inches of interval. Final 16 inches is a densely indurated clayey silt with 10% sand gr. Interval is damp. Light tan color				60	15/30	15	Ø	17:00
13													
14													
15													
16	20-25		30"		First 18 inches of interval coarse sand with 15%				90	10		Ø	17:10

BORING LOG FORM

Boring #: MW 13

Sheet 2 of

Project Name and Location: Bldg 336 MW 13

TC Number:

Depth	Sample No.	Sample Interval	Recovery	Blow Count	Description	Graphic Symbol	USCS Symbol	Estimated % of Gr	Sa	Si	Cl	P.I.D. Reading	Comments
	20-25 (cont.)				rounded gravel, coarsely bedded with cm scale fine sand interbeds. Sharp basal contact with underlying finely bedded fine sand. Fine sand is weakly indurated, upper coarse sand is loose. Damp.							Ø	
	25-30		36"		Massive, poorly indurated fine sand with indistinct coarse bedding for first 28 inches of interval. Gradational contact with underlying medium sand. Interval is damp. Light tan color				80	20		1.5	
	30-35		56"		Fine sand with ~5% coarse sand clasts. Gradional facies change to clayey sand to clayey silt to silty clay to massive clay over first 44 inches of interval. Sharp basal contact with underly medium sand which is finely bedded and contains both clay and gravel interbeds. This chaotic lower unit has bright orange oxide banding.			5	20	30	45	1.2	nearly 100% rec
	35-40		27"		Mixed medium and coarse sand for first 6 inches of interval. Sharp basal contact into 8 inch thick finely bedded clayey-silty fine sand. Sharp basal			10	50	20	20	Ø	Black oxide coatings.

BORING LOG FORM

Boring #: MW 13
Sheet 3 of

Project Name and Location: Bldg 336 MW 13
TC Number:

Depth (ft)	Sample No.	Sample Interval	Recovery	Blow Count	Description	Graphic Symbol	USCS Symbol	Estimated % of Gr	Sa	Si	Cl	P.I.D. Reading	Comments
	35-40 (cont)				contact into underlying chaotic package of bedded coarse sand, fine sand and gravely coarse sand. Sooty black oxide stain seen in layers (cm scale) throughout interval. As with previous holes, no PID responce.								
	40-45		20"		Coarse sub-rounded gravel and coarse sand ~~mixto~~ mixed throughout short interval. Dry to weakly indurated. cm scale silty clay zone in middle.			20	60	10	10	Ø	17:50
1-29 / 1-30	45-50		12"		Gravelly medium sand first 6 inches, sharp basal contact with underlying interbedded silty clay and massive clay sequence, 15 inches thick. Gradational contact to underlying silty coarse sand. Lower 36 inches of interval is moderately to well indurated. Interval is damp.								
	50-55		24"		Coarse, gravelly sand, coarsely bedded, loose, damp. Sooty black oxide clast coating in select layers.			20	70	10		Ø	
	55-60	33"	28"		Silty clay - first 4 inches, sharp basal contact with underlying coarse sand - next 12 inches. Sharp basal	? ?			70	10	20	1.3	

BORING LOG FORM

Boring #: MW 13
Sheet 4 of

Project Name and Location:
TC Number: 11377-02-02

Depth	Sample No.	Sample Interval	Recovery	Blow Count	Description	Graphic Symbol	USCS Symbol	Estimated % of Gr	Sa	Si	Cl	P.I.D. Reading	Comments
	55-60 (cont.)				contact with underlying finely bedded, weakly indurated fine sand with cm scale clay beds. Medium sand to end of interval. Bright orange oxide coating @ end of interval.	??							
	60-65		31"		Silty, micaous clay grading down into massive clay (0-18 inches) Sharp basal contact to fine sand grading down into coarse, rounded gravelly sand. Interval is mod indurated except for basal sand which is loose. Interval is damp	??		20	30	30	20	Ø	Bad-loose sand layer.
	65-70		21"		Loose, rounded, gravelly sand. Massive to coarsely bedded.	???		40	40	10	10		More bad sand. Hole getting tight
	70-75		34"		Clay matrix gravel top 3 inches of grading down into silty-clayey rounded coarse sand and gravel. Sharp contact contact @ 8 inches with underlying massive clay and gravelly clay - well indurated. Sharp contact @ 14 inches with underlying, finely bedded fine sand. PID of 13.7 near end of interval.	DAMP ???	H_2O	10	60	20	10	13.7	Water in rounded sand gravel near top of interval. Sample MW13-01 @ 74' bgs 9:20
	75-80		42"		silty fine sand for first 24 inches of interval. Damp and weakly indurated. Sharp basal contact with underlying				60	20	20	15.0	

BORING LOG FORM

Boring #: MW 13

Sheet 5 of 5

Project Name and Location:

TC Number: 11377-02-02

Depth	Sample No.	Sample Interval	Recovery	Blow Count	Description	Graphic Symbol	USCS Symbol	Estimated % of Gr	Sa	Si	Cl	P.I.D. Reading	Comments
	75-80 (cont.)				massive orange clay. Sharp basal contact with medium sand, damp, loose. PID of 15 near bottom of interval (in med. sand). Sample.	? ? ?							Sample MW13-02-S 9:50 ~79 feet bgs.
	80-85		41"		Well sorted fine sand with 1 to 5 cm thick orange clay interbeds. Interval is mod. indurated and very damp to wet. PID of 464 in bottom foot of interval	? ?			60	20	20	190 217 464	Sample MW13-03-S @ 84' 10:00
	85-90		42"		Well sorted fine sand with 2 to 7 cm thick olive tan clay interbeds interval is weakly to moderately indurated and very damp to wet. No free H_2O noted.	? ?			60	20	20	224 190	Sample 04 10:15 @ 86' bgs
	90-95		41"		Very fine silty-clayey sand with massive clay interbeds. Sharp choclate brown stained contact @ 29 inches into interval. Well sorted and rounded coarse to fine sand for bottom 12 inches of interval.	? ? ?			40	30	30	2.8	Water @ 90' bgs Good aquifer
	95-100		60"		Loose, H_2O saturated fine sand for first 8 inches of interval. Gradational contact with silty, shaley clay to 38 inches into interval. Interbedded clayey coarse sand and silty clay to bottom.		H_2O		30	40	30	1.1	

Monitoring Well Construction Data
Hawthorne Army Depot, Hawthorne, Nevada

Monitoring Well: MW13 **Date:** 1/31/01

Date of well construction: 1/31/01 Time of well construction: 7:00
Reference elevation during construction: ~4000'
Depth ground water first encountered:
Depth of static ground water before construction:
Depth of static ground water after construction:
Boring depth: 100 feet bgs Casing length: 97 feet
Borehole diameter: 10 inch Well casing diameter: 4 inch

Blank Casing:
Type Schedule 40 - 4inch Interval 77 feet bgs to surface
Material PVC Joint type Flush Thread

Screen Casing:
Type Schedule 40 - 4inch Interval 97 feet bgs to 77 feet bgs
Material PVC Slot size/design 0.02

Centralizer Depths: none

Filter Pack:
Material High-Quality Silica Sand Interval 97 feet bgs to 72 feet bgs
Gradation Uniformity coefficient
Size #3 Volume calculated 12.3 ft³
Volume actual 10.5 ft³ Placement method poured from surface through auger.

Transition Sand:
Material Interval
Gradation Uniformity coefficient
Size Volume calculated
Volume actual Placement method

Annular Sealant:
Material bentonite chips Interval 72 feet bgs to 67 feet bgs
Volume calculated Volume actual 2.5 sacks
Placement method poured from surface through auger

Grout:
Material Cement with ~ 1% bentonite Interval 67 feet bgs to 1 feet bgs
Volume calculated 230 gallons Volume actual 252 gallons
Placement method tremie pipe

Comments: Grout has settled back to ~ 12 feet bgs.

Monitoring Well Construction Sheet

Project: Bldg. 336 Phase 3 Ground Water Invest.

Project No.: 11377-02-02

Well Number: _____

Field Geologist: R. Marvin

Date: _____

Driller: W.D.C. - Jimmy F.

Drilling Method: Hollow Stem Auger
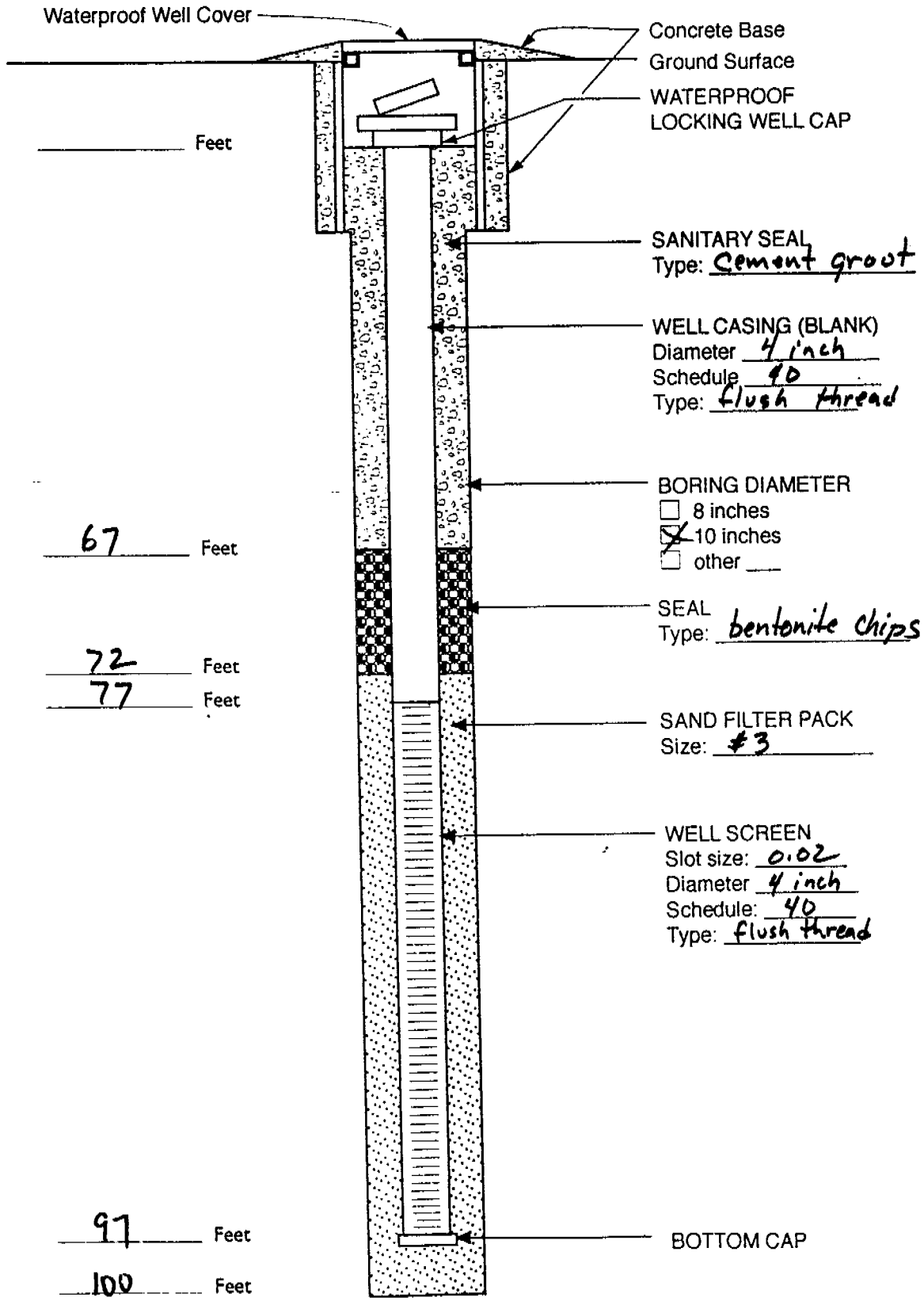
Registered Geologist: _____