Log # 34850

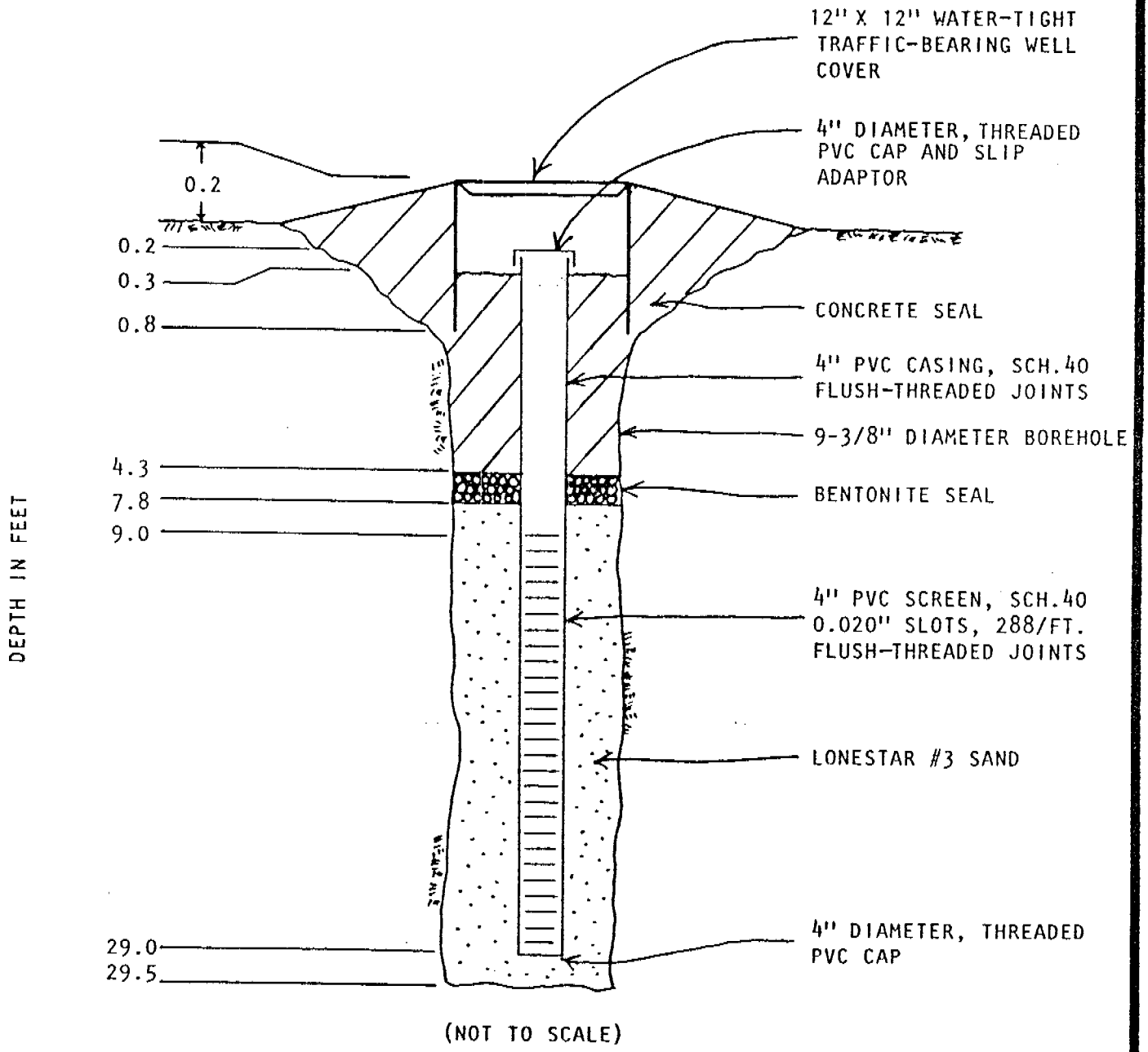

(NOT TO SCALE)

MONITORING WELL MW-8
CONSTRUCTION DETAILS

JOB L90317.FC DATE 10-17-90 DR. LW O.E. LW W.P. Jp CHKD LW

FORM 120