INDIAN SPRINGS WATER WELL

Drilled by Abermin Inc., August-September 1988

NE¼SE¼ Section 12, T. 43N., R. 68E., M.D.B.&M. Elko County

WELL CONSTRUCTION

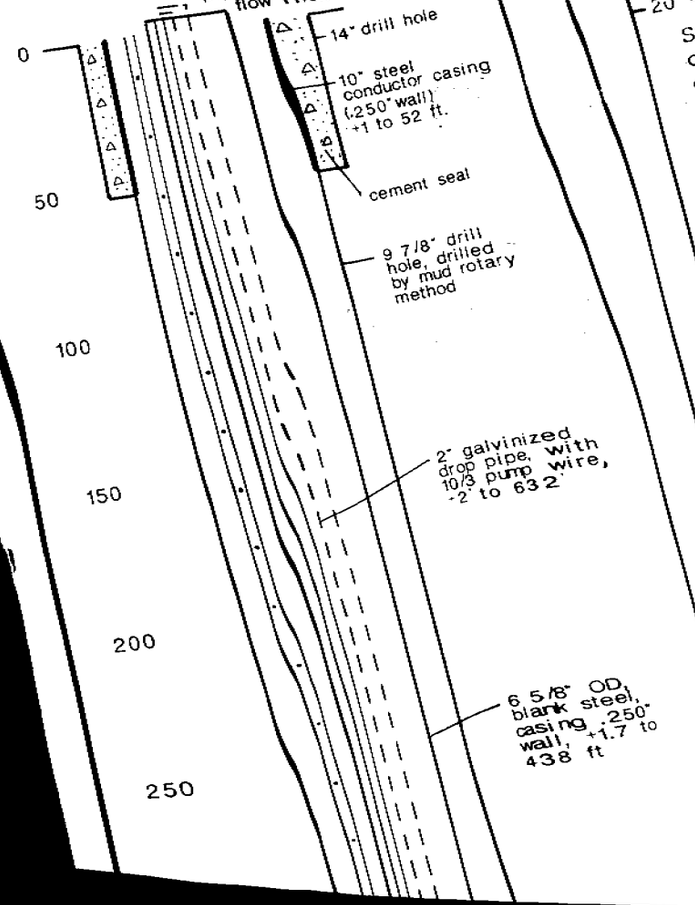

POTENTIAL WATER BEARING FORMATIONS

LITHOLOGIC LOG

0 — Alluvial/colluvial-sand, silt and gravel

20 — SS-red brown to tan, v. silty, clayey, very soft, occasional gravel layers bottom half

180 — SS-1. gray becoming l. grn-yel, silty and clayey, soft to med. hardness with depth

NOTES/OBSERVATIONS

1,2,3 . . . Chronology of observations

9. 130-160' Sept. 5, start reaming to cler tight areas. This zone slight tight area.

10. 190' Sept. 5, reaming slight tight spot.

11. 305-320' Sept. 5, reaming-noted tight area, took 5000 lbs off line weight.

1. 330' Aug. 28, first signs mud loss, slight.

12. 330' Sept. 5, while reaming, lost circulation, essentialy circulation was never regained.

poor recovery. Absence of
te interbedded soft ss.

PERMIT NUMBER 388634

INDIAN SPRINGS WATER WELL #2

Drilled by Abermin Inc., August–September 1988

NE¼ SE¼ Section 12, T. 43N., R. 68E., MDB&M. Elko County

WELL CONSTRUCTION

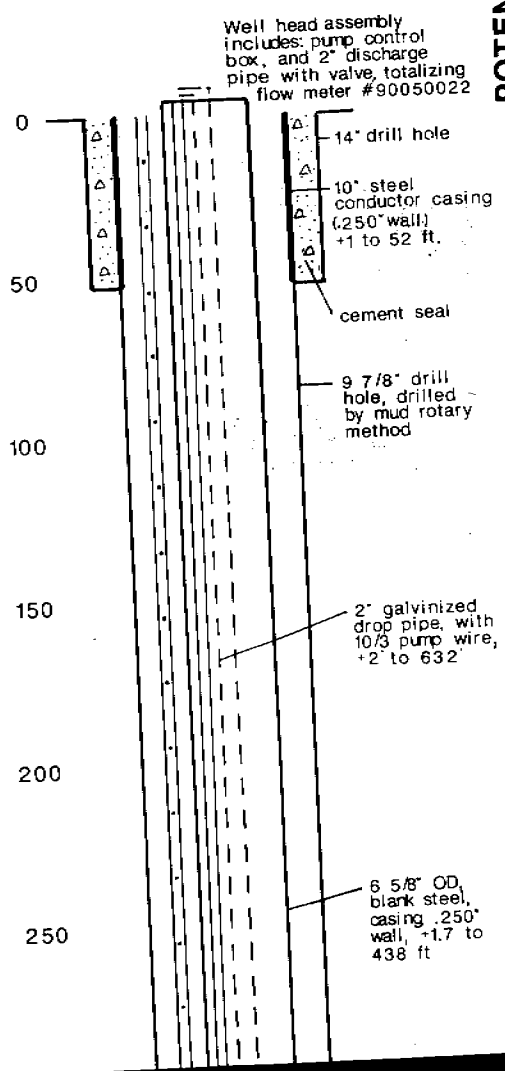

POTENTIAL WATER BEARING FORMATIONS

LITHOLOGIC LOG

0 — Alluvial/colluvial-sand, silt and gravel

20 — SS-red brown to tan, v. silty, clayey, very soft, occasional gravel layers bottom half

180 — SS-1. gray becoming 1. grn-yel, silty and clayey, soft to med. hardness with depth

NOTES/OBSERVATIONS

1,2,3 . . . Chronology of observations

9. 130-160' Sept. 5, start reaming to cler tight areas. This zone slight tight area.

10. 190' Sept. 5, reaming slight tight spot.

PERMIT NUMBER 38834

INDIAN SPRINGS WATER WELL #2

Drilled by Abermin Inc., August-September 1988

NE¼ SE¼ Section 12, T. 43N., R. 68E., MDB&M. Elko County

WELL CONSTRUCTION

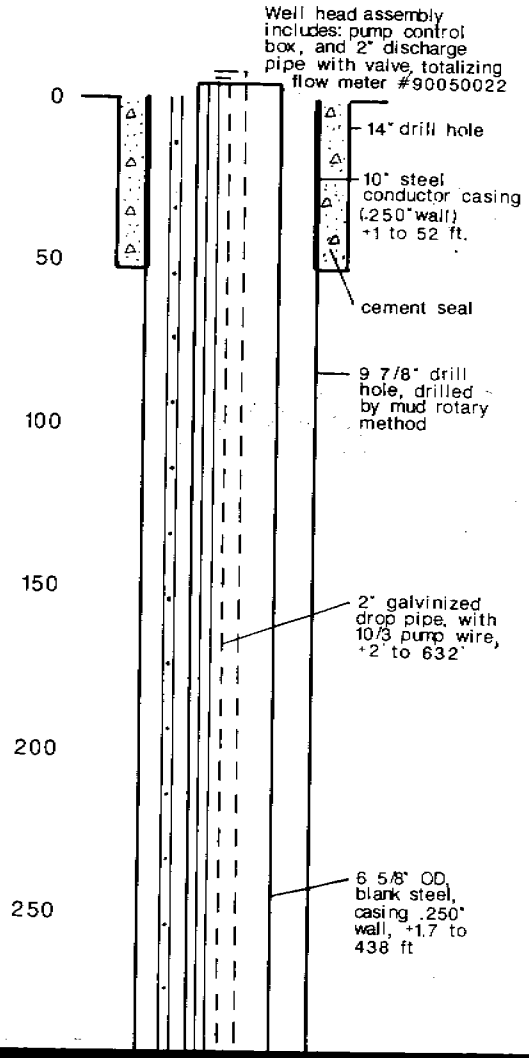

POTENTIAL WATER BEARING FORMATIONS

LITHOLOGIC LOG

0 — Alluvial/colluvial-sand, silt and gravel

20 — SS-red brown to tan, v. silty, clayey, very soft, occasional gravel layers bottom half

180 — SS-1. gray becoming 1. grn-yel, silty and clayey, soft to med. hardness with depth

NOTES/OBSERVATIONS

1,2,3 . . . Chronology of observations

9. 130-160' Sept. 5, start reaming to cler tight areas. This zone slight tight area.

10. 190' Sept. 5, reaming slight tight spot.

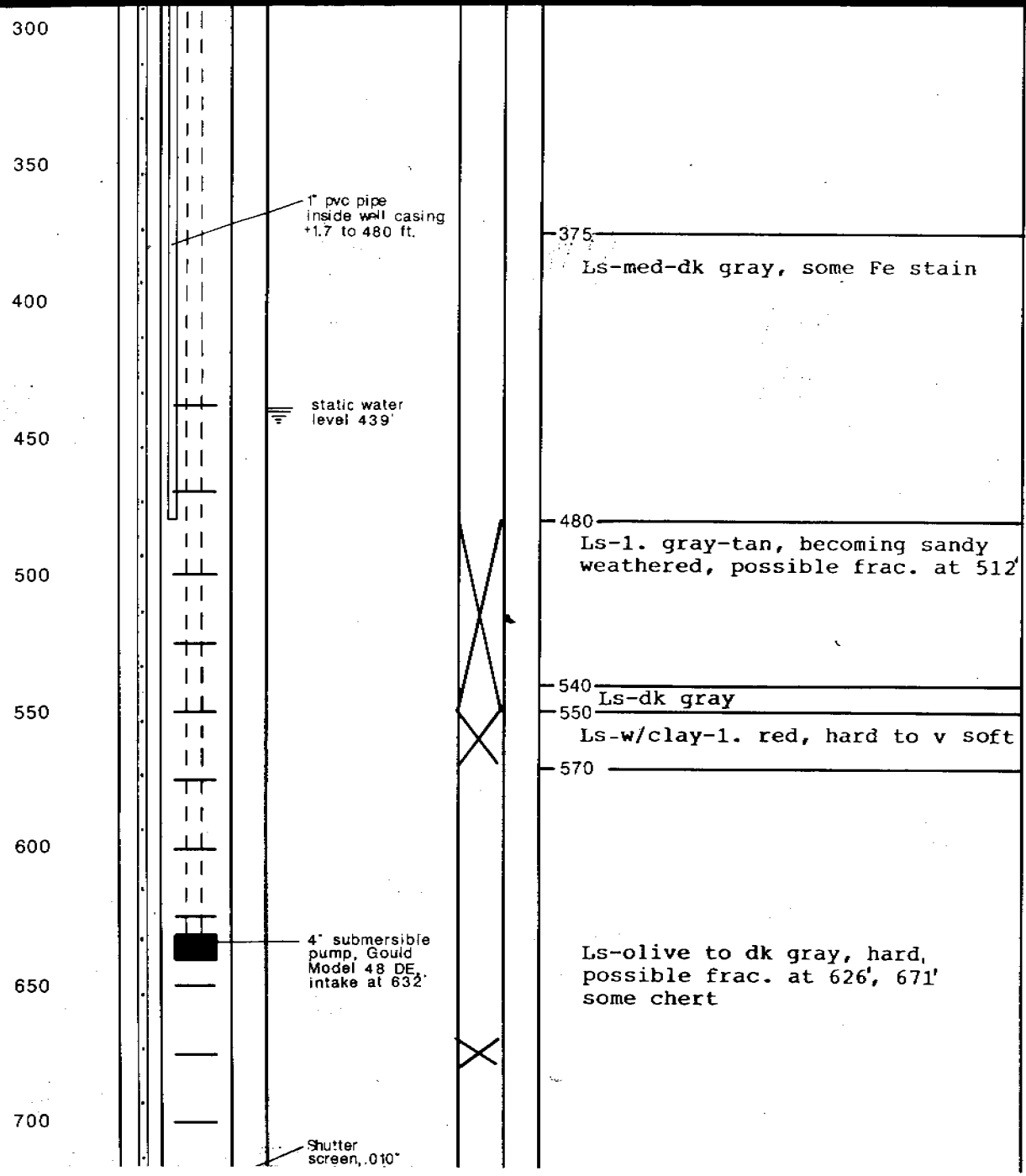

11. 305-320' Sept. 5, reaming-noted tight area, took 5000 lbs off line weight.

1. 330' Aug. 28, first signs mud loss, slight.

12. 330' Sept. 5, while reaming, lost circulation, essentialy circulation was never regained.

2. 434' Aug 28, end of shift. Next morning hole had taken significant portion of drill mud.

3. 461' Aug 29, end of shift, next morning hole ahd taken most of drill mud.

8. 100'to ~ (480-510') Sept. 3, down day, rods, left in hole. Sept. 4, while pulling rods, they first hung up at 480-510' with continued hang ups to about 100'

13. 547-557' Sept. 8/ still reaming, tight spot. Mud came to 69 ft. of surface.

7. 550-590' Aug. 31, while lowering drill rods, rods temporarily hung up here.

4. 630' Aug. 30, mud losses from Aug 28 & 29 continued to about this depth. Note circulation was never lost.

5. 640' Aug. 30, small mud loss

6. 680' Aug. 30, small mud loss

14. 715-717' Sept. 10, tight spot-lithologic

PERMIT NUMBER 388834

INDIAN SPRINGS WATER WELL #2

Drilled by Abermin Inc., August-September 1988

NE¼ SE¼ Section 12, T. 43N., R. 68E., M.D.B.&M. Elko County

WELL CONSTRUCTION

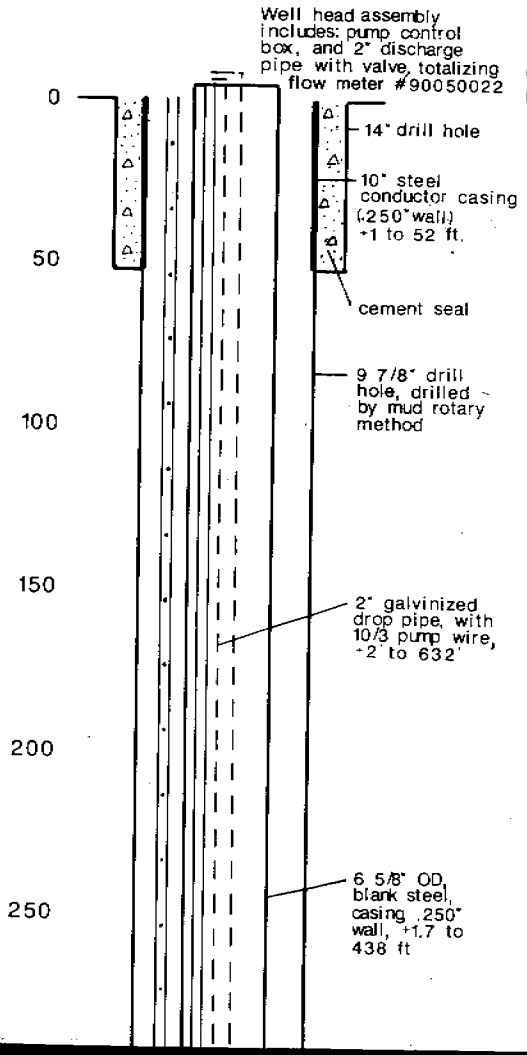

POTENTIAL WATER BEARING FORMATIONS

LITHOLOGIC LOG

0 — Alluvial/colluvial-sand, silt and gravel

20 — SS-red brown to tan, v. silty, clayey, very soft, occasional gravel layers bottom half

180 — SS-1. gray becoming l. grn-yel, silty and clayey, soft to med. hardness with depth

NOTES/OBSERVATIONS

1,2,3 . . . Chronology of observations

9. 130-160' Sept. 5, start reaming to cler tight areas. This zone slight tight area.

10. 190' Sept. 5, reaming slight tight spot.

PERMIT NUMBER 38834

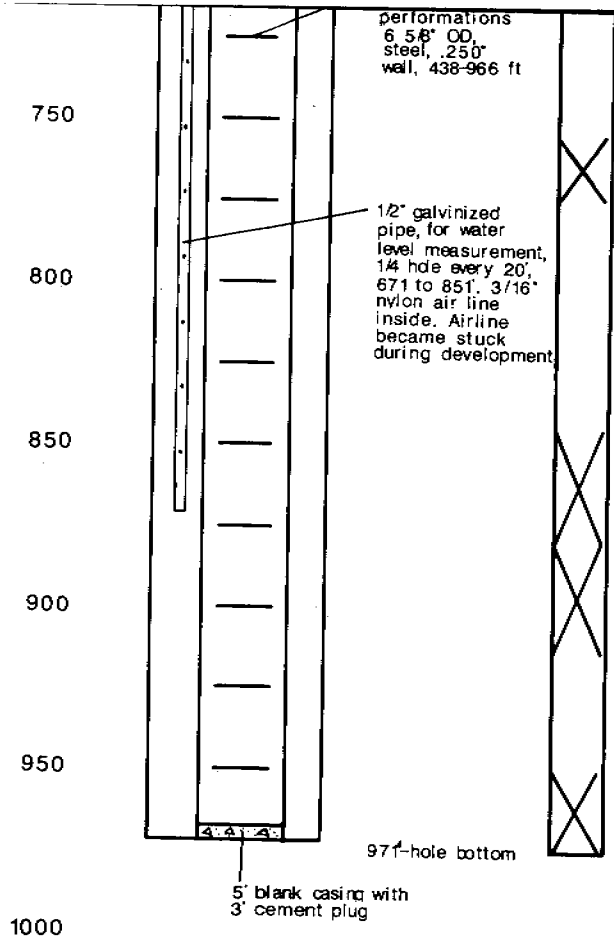

745 SS-pale tan green

755 Ls-gray partly altered red, calcite fillings, frac. 768'

770 Ls-olive gray, v. sl altered

845 Ls-olive gray, partly altered, stained surfaces, frac. 848', 856'

880 Ls-dk gray, clay-mylonite, broken with calcite fillings

910 Ls-med l. gray, non altered

950 Ls-dk gray, clay-mylonite, broken with calcite fillings

971

SS = sandstone Ls = limestone

14. 715-717' Sept. 10, tight spot [illegible] log notes showed poor recovery. Absence of sample may indicate interbedded soft ss.

15. 961' Sept. 11, finished reaming slight circulation.

16. 971' Sept. 12, drill 10'-hard drilling, lost circulation-decided to end drilling.

Log#: 30657

PERMIT NUMBER: 38834

INDIAN SPRINGS PROJECT
Elko County, Nevada

SUMMARY OF INDIAN SPRINGS MONITOR WELL #2

D. Gabbay Consulting Hydrologist

DATE: November 1990 FOR: ABERMIN, INC.

Basin: 11-189 d