STATE OF NEVADA
DIVISION OF WATER RESOURCES
WELL DRILLER'S REPORT

OFFICE USE ONLY
Log No. 115523
Permit No.
Basin No. 049

PRINT OR TYPE IN BLACK INK ONLY
DO NOT WRITE ON BACK

Please complete this form in its entirety in accordance with NRS 534.170 and NAC 534.340

NOTICE OF INTENT NO. 69196
WELL NAME (if applicable): MW - 6

1. OWNER/CLIENT NAME Union Pacific Railroad
MAILING ADDRESS 221 Hodgeman St.
SE Laramine WY. 82072

DETAILED ADDRESS AT WELL LOCATION W. Commercial St. Between Mountain city Hwy + 3rd Street. Elko Nevada
Subdivision Name: County: Elko

2. PLS LOCATION ~~SW~~ ¼ SW ¼ 15 Sec 34 N/S 55 E
PERMIT/WAIVER NO. F-000212 (Issued by Water Resources) (Current Parcel No)
Latitude 40° 49' 42.6" UTM E 603921.93 ☐ NAD 27
Longitude 115° 46' 02.6" UTM N 4520439.82 X NAD 83/WGS 84

3. WORKED PERFORMED
X New Well ☐ Deepen: Original well log # ____
☐ Replacement: Original well log # ____
☐ Recondition: Original well log # ____

4. PROPOSED USE
☐ Domestic ☐ Irrigation X Monitor
☐ Mining / Dewater ☐ Com / Ind ☐ Stock
☐ Test / Other ____ ☐ Mun / QM ☐ Rec

5. WELL TYPE
☐ Auger ☐ Rotary ☐ RVC
☐ Air ☐ Mud ☐ Sonic
X Other Auger

6. LITHOLOGIC LOG

Material Encountered	Lost Circ.	Water Strata	From	To	Thickness
Please See Attach					

Date started 8-5, 20 12
Date completed 8-5, 20 12

RECEIVED 2012 AUG 23 AM 1:0 STATE ENGINEERS OFFICE

9. WELL CONSTRUCTION
Depth Drilled: 22' Feet Depth Cased: 22' Feet

HOLE DIAMETER (BIT SIZE)

		From		To	
10"	Inches	0	Feet	22'	Feet
	Inches		Feet		Feet
	Inches		Feet		Feet

CASING SCHEDULE

Size O.D. (Inches)	Weight/Ft. (Pounds)	Wall Thickness (Inches)	From (Feet)	To (Feet)
4"		Sch 40	0	22'

PERFORATIONS:
Type of perforation: Manufactured Slot
Size of perforation: 020
From 6' Feet To 22' Feet
From ____ Feet To ____ Feet
From ____ Feet To ____ Feet

ANNULAR MATERIALS

☐ Sanitary Seal		to		
X Neat Cement	0	to 2'	☐ Pumped	X Poured
☐ Cement Grout		to	☐ Pumped	☐ Poured
☐ Concrete Grout		to	☐ Pumped	☐ Poured
X Bentonite Chips	2'	to 4'	☐ Pumped	X Poured
☐ Bentonite Grout		to	☐ Pumped	☐ Poured
☐ 15 % ☐ 20 % ☐ Other, explain:				
X Gravel Pack [> 0.2 in.]	4'	to 22'	☐ Pumped	X Poured
☐ Sand Pack [< 0.2 in.]		to	☐ Pumped	☐ Poured
☐ Other, explain:		to	☐ Pumped	☐ Poured

7. WATER QUALITIES
Static water level: 10' Feet below land surface
Artesian Flow: ____ G.P.M. ____ P.S.I.
Water Temperature: ____ ° Fahrenheit
Water Quality: ____

8. WELL TEST DATA
Test Method: ☐ Bailer ☐ Pump ☐ Air Lift

G.P.M.	Draw Down (Feet Below Static)	Recorded Time (Hours)

10. DRILLER'S CERTIFICATION
This well was drilled under my supervision. This report is true to the best of my knowledge.
Name Gregg Drilling (Contractor)
Address 950 Howe Ave Martinez Ca. 94553 (Contractor)

Nevada contractor's license number as issued by the State Contractor's Board: C23-0038113
Nevada well driller's license number as issued by the Nevada Division of Water Resources (on-site driller): M-2354
Signed: Eric Santell (By driller performing actual drilling on site or contractor)
Date. 8-5-12

(Rev. 08-12) **USE ADDITIONAL SHEETS IF NECESSARY**

40.828487 °N
115.766631 °W NAD27

8-3-2012

Lat 40° 49' 42.6"

Long 115° 46' 02.6"

Elv 5066

MW-6

DEPTH BELOW	SAMPLE NUMBER	SAMPLE TYPE	SAMPLE RECOVERY (FT)	STANDARD PENETRATION TEST RESULTS 6"-6"-6" (N)	SOIL DESCRIPTION: SOIL NAME, USCS GROUP SYMBOL, COLOR, MOISTURE CONTENT, RELATIVE DENSITY OR CONSISTENCY, SOIL STRUCTURE, MINERALOGY	COMMENTS: DEPTH OF CASING, DRILLING RATE, DRILLING FLUID LOSS, TESTS AND INSTRUMENTATION
0	S000	SS/SL (G)		15-12-10	Ground Surface 0-0.5' Well graded gravel with sand (GW) 5Y 2.5/1 Black 0.5-1.0' Well graded sand w/silt (SW-SM) and gravel 10YR 5/6 Yellowish brown.	Asphalt cap = 0.5"
5	S005	SS/SL (G)		3-4-6	1.0-1.5' Poorly graded sand (fine) with silt (SP-SM). Trace gravel. (sub-angular) soft consistency. 2.5Y 3/2 very dark grayish brown.	
10	S010	SS/SL (G)		7-11-12	5.0-6.5' - same as above except color 2.5Y 4/4 olive brown.	▽ GW @ ≈10.0'
15	S015	SS/SL (G)		12-15-22	10.0-10.5 - Elastic silt with sand (MH) GLEY 1 10Y 4/1 dark greenish gray. Medium-high plasticity. Soft consistency.	
20	S020	SS/SL (G)		14-15-20	10.5-11.5 - Well graded gravel w/ silt and sand (GW-GM) 2.5Y 4/2 dark grayish brown. WET.	
25					15.0-15.75 - Poorly graded sand (fine-medium) (SP). trace gravel. 10YR 5/6 Yellowish brown. Moist	
30					15.75-16.5 Poorly graded sand w/silt (SP-SM) 2.5Y 6/4 light yellowish brown Moist - Wet	
35					20.0-21.0 - Well graded sand w/ gravel (SW) 2.5Y 5/4 light olive brown. subangular - rounded grains. Small shell fragments in soil. Moist - Wet.	
40					21.0-21.5 - Poorly graded sand (fine) w/ silt (SP-SM) 2.5Y 5/4 light olive brown. medium dense. wet	
45						
50						

RECEIVED
2012 AUG 23 AM 11:00
STATE ENGINEERS OFFICE

MW-6

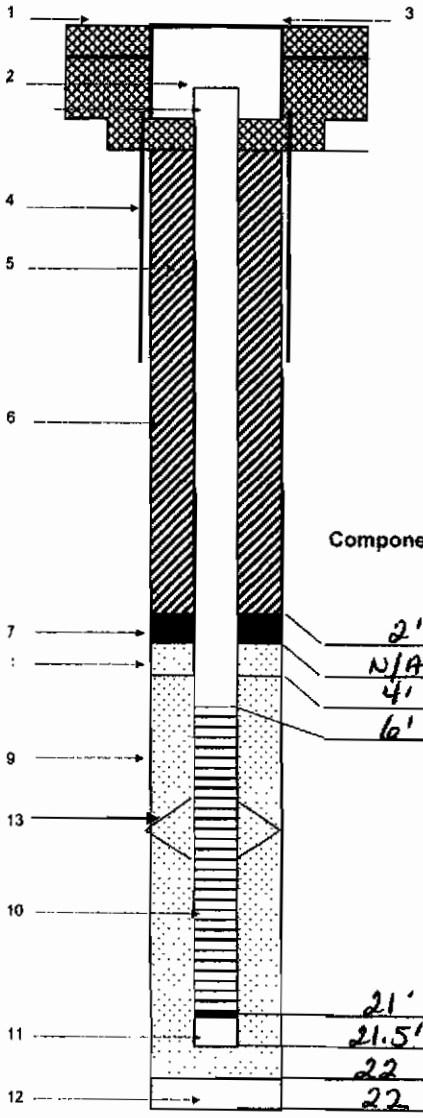

Component Depths BGS

2'	Top of seal (ft bgs)
N/A	Top of transition sand (ft bgs)
4'	Top of pack (ft bgs)
6'	Top of screen (ft bgs)
21'	Bottom of screen (ft bgs)
21.5'	Bottom of sump (ft bgs)
22	Bottom of pack (ft bgs)
22	Bottom of borehole (ft bgs

NOTE: DRAWING NOT TO SCALE

Well Development

Start Date/Time:

End Date/Time:

Development Method:

Duration.

Purgevolume: gal

Volume of water injected during drilling/ well installation. gal

Calculated well volume: gal

Comments

1- Ground elevation at well ft above msl

2- Top of casing elevation ft above msl

3- Surface completion type: Flush Mount
- a) Diameter: 15.0" in
- b) Concrete pad dimensions: in
- c) Bollards: none

4- Conductor casing type
- a) Diameter: N/A in
- b) Length: ft

5- Well casing type: PVC SCH 40
- a) Diameter: 4.0" in
- b) Length: 21.5' ft

6- Sanitary seal type: neat cement
- a) Method of placement: pour
- b) Volume of grout used: 10 ga
- c) Calculated volume: 0.92 ft^3 gal

7 Transition seal type: bentonite
- a) Quantity used: 1 50 lb. bag
- b) Calculated quantity: 0.92 ft^3 50 lb bags

8- Transition filter pack type
- a) Quantity used: N/A
- b) Calculated quantity: ft^3 100 lb bags

9- Filter pack type: #3 Monteray Sand
- a) Quantity used: 9 100 lb. bags
- b) Calculated quantity: 7.82 ft^3 100 lb bags

10- Screen type / slot size: 0.020 PVC SCH 40
- a) Diameter: 4.0" in
- b) Length: 15.0' ft
- c) Slot size: 0.020 in

11- Sump / end cap type: PVC threaded
- a) Diameter: 4.0" in
- b) Length: 0.5' ft

12- Backfill type
- a) Quantity used: N/A ft^3
- b) Calculated quantity: ft^3

13- Centralizer type
- a) Depths (ft bgs): N/A

STATE ENGINEERS OFFICE
2012 AUG 23 AM 11:05
RECEIVED