STATE OF NEVADA
DIVISION OF WATER RESOURCES
WELL DRILLER'S REPORT

OFFICE USE ONLY
Log No. 115546
Permit No.
Basin 101

PRINT OR TYPE ONLY
DO NOT WRITE ON BACK

Please complete this form it its entirety in accordance with NRS 534.170 and NAC 534.340

NOTICE OF INTENT NO. 66874

1. OWNER U.S. Navy IW-2D
MAILING ADDRESS 4755 Pasture Road Fallon Nv. 89496
ADDRESS AT WELL LOCATION NAS Fallon Nv.
4755 Pasture Road Fallon Nv. 89496

2. LOCATION NW ¼ SE ¼ Sec 23 T 18N N/S R 29 E
PERMIT/WAIVER No. 006-611-01
Issued by Water Resources Parcel No.
Latitude 39.242720 Longitude 118.414918
UTM E 2592620.88 N 14818861.12
☐ NAD 27 ☑ NAD 83/WGS 84
Subdivision Name: n/a County: Churchill

3. WORKED PERFORMED
☑ New Well ☐ Replace ☐ Recondition
☐ Deepen ☐ Other...

4. PROPOSED USE Injection
☐ Domestic ☐ Irrigation ☐ Test
☐ Municipal/Industrial ☑ Monitor ☐ Stock

5. WELL TYPE
☐ Cable ☐ Rotary ☐ RVC
☐ Air ☑ Other... auger

6. LITHOLOGIC LOG

Material	Water Strata	From	To	Thickness
Silty sand,brown	no	0	1	1
Clay,dark brown	no	1	7	6
Silty sand,brown	no	7	9	2
Silty clayey sand,brown	yes	9	10	1
Clay,brown	no	10	12	2
Silty sand,brown	yes	12	14	2
Clayey silt brown	no	14	17	3

RECEIVED 2012 MAR -8 AM 11:21 STATE ENGINEER'S OFFICE

Date started 7-Feb , 20 12
Date completed 7-Feb , 20 12

7. WELL TEST DATA
TEST METHOD: ☐ Bailer ☐ Pump ☐ Air Lift

G.P.M.	Draw Down (Feet Below Static)	Time (Hours)
	39.407637°N	NAD 27
	118.696013°W	

8. WELL CONSTRUCTION
Depth Drilled 17 Feet Depth Cased 14 Feet

HOLE DIAMETER (BIT SIZE)

	From	To
8 Inches	0 Feet	17 Feet
Inches	Feet	Feet
Inches	Feet	Feet

CASING SCHEDULE

Size O.D. (Inches)	Weight/Ft. (Pounds)	Wall Thickness (Inches)	From (Feet)	To (Feet)
1/2		stainless steel	0	13
1/2		stainless steel	0	9

Perforations:
Type of perforation 1 " stainless steel wire wrap
Size of perforation 0.01
From 13 feet to 14 feet
From 9 feet to 10 feet
From feet to feet
From feet to feet
From feet to feet

Surface Seal: ☑ Yes ☐ No
Depth of Seal 8
Placement Method: ☐ Pumped ☑ Poured
Seal Type: ☑ Neat Cement ☐ Cement Grout ☐ Concrete Grout
Gravel Packed: ☑ Yes ☐ No
From 8 feet to 17 feet

9. WATER LEVEL
Static water level n/a feet below land surface
Artesian flow n/a G.P.M n/a P.S.I
Water temperature n/a °F Quality n/a

10. DRILLER'S CERTIFICATION
This well was drilled under my supervision and the report is true to the best of my knowledge.
Name WDC Exploration & Wells (Contractor)
Address PO Box 141 Zamora Ca. 95698 (Contractor)
Nevada contractor's license number issued by the *State Contractor's Board* 0012852
Nevada driller's license number issued by the Division of Water Resources, the *on-site driller* 2111-T1
Signed (By driller performing actual drilling on site or contractor)
Date 3/6/2012

(Rev. 06/10)
USE ADDITIONAL SHEETS IF NECESSARY

Log # 115546

Sheet 1 of 2

TETRA TECH EM INC.

SOIL BORING AND WELL INSTALLATION AND VISUAL CLASSIFICATION LOG

DO:
Bldg./Site: 16
Project Name: NAS FALLON TCRA

Boring Number: TT 16 - IW 20	Date Started: 2/7/12
Drilling Method: (Circle one) HSA Continuous Core/Direct Push/Hand Auger	Date Completed: 2/7/2
Air Rotary/Mud Rotary/Dual Tube Percussion/Sonic/Vacuum	Logged By: V. PRILEPIN
Outer Diameter of Boring: 8"	Drilling Subcontractor: WDC EXPL. & WELLS
Inner Diameter of Well Casing: 0.5" and 0.5"	Driller: GARY WHITLEY
Depth to Water (ft./bgs.)	Location Sketch:

RECEIVED 2012 MAR -8 AM 11:2 STATE ENGINEERS OFFICE

Time	Depth (ft) bgs	Drive Interval	Recovered Interval	Sample ID	Blow count (per 6 inches) / V.O. utility type, dia.	Description	USCS soil symbol	Well construction	OVM (ppm)
						0-5 HAND AUGERED 0-1 silty sand, loose, dry 1-7.5 clay, dark brown, 7.5YR 3/3, soft to semi stiff, 100% clay	SP CL		
	2		50						
	4								
	6		90			becoming soft to very soft at 7.5'		6 b.seal	
	8					7.5-8.5 silty sand, brown, 7.5YR 4/3, very fine to fine, wet, 85% sand, 15% silt 8.5-9.0 silty clay, brown, soft, w/ tiny mica, 80 clay, 20 silt 9-10, silty, clayey sand, brown, saturated, 60% very fine to fine sand, 30-40% silt, 10-20% clay.	SM CL SM	8 9	
	10		80					10	

grade

S:\ABCRU\Hunters Point Shipyard\DO 0919 (PLOB X027)\WE2-Plans\Draft SAP\for Angela\appendices\Appendix C\04. Soil Boring and Well Installation Log.doc

Log #115546

Sheet 2 of 2

TETRA TECH EM INC.

SOIL BORING AND WELL INSTALLATION AND VISUAL CLASSIFICATION LOG

TT16 - IW20

DO:
Bldg./Site: 16
Project Name: NAS FALLON TCRA

Time	Depth (ft) bgs	Drive interval	Recovered interval	Sample ID	Blow count (per 6 inches) / V.B. utility type, dia.	Description	USCS soil symbol	Well construction	OVM (ppm)
						10-12.5 clay, brown, 7.5 YR 4/2, soft to very stiff at 11, low plasticity, 100% clay	CL		10.4
									B.S.
	12		80			12.5-14 silty sand, brown, micaceous, with zones of gray colorization likely due to organics, 80% fine to very fine sand, 20% silt, w/tiny mica	SM		12
									13
	14					14-15, clay, brown 7.5YR 4/2, stiff, dry, 100% clay	CL		14
									14.3
			100			15-16, clayey silt, brown, 7.5YR 4/3, soft w/tiny mica, dry, 60% silt, 40% clay, <5% fine sand	ML		B. pellets
	16					16-17 silty clay to clay, brown, soft to med. stiff., easily crumbles, dry	CL		
	17					T.D. 17'			

RECEIVED
2012 MAR 8 AM 11:21
STATE ENGINEERS OFFICE

INJECTION

~~MONITORING~~ WELL COMPLETION RECORD

Log #115546

TETRATECH EM INC

MONITORING WELL

~~MONITORING~~ WELL NO.: TT16-IW20
PROJECT: NAS FALLON TCRA
SITE: 16
BOREHOLE NO.:
WELL PERMIT NO.:
TOC TO BOTTOM OF WELL:

DRILLING INFORMATION

DRILLING BEGAN:
DATE: 2/7/12 TIME: 8:25
WELL INSTALLATION BEGAN:
DATE: 2/7/12 TIME: 8:55
WELL INSTALLATION FINISHED:
DATE: 2/7/12 TIME: 10:00
DRILLING CO.: WDC
DRILLER: GARY WHITLEY
LICENSE:
DRILL RIG: USA CMI '85
DRILLING METHOD:
- ■ HOLLOW STEM AUGER
- ☐ AIR ROTARY
- ☐ OTHER:

DIAMETER OF AUGERS:
ID: OD: 8"

WELL CASING

- ☐ SCHEDULE 40 PVC
- ■ OTHER:

PRODUCT: SS 316
MFG. BY: APT WATER
CASING DIAMETER:
ID: OD: 0.5"
LENGTH OF CASING:

WELL SCREEN

- ☐ SCHEDULE 40 PVC
- ■ OTHER:

PRODUCT: SS 316
MFG. BY: APT WATER
CASING DIAMETER:
ID: OD: 0.5"
SLOT SIZE: 0.01
LENGTH OF SCREEN: 1' (with screen)

BOREHOLE BACKFILL

AMOUNT CALCULATED:
AMOUNT USED:
- ☐ BENTONITE CHIPS, SIZE:
- ■ BENTONITE PELLETS, SIZE: 1/4" coated
- ☐ SLURRY:
- ☐ FORMATION COLLAPSE:
- ☐ OTHER:

PRODUCT:
MFG. BY:
METHOD INSTALLED:
- ■ POURED
- ☐ TREMIE
- ☐ OTHER:

SURFACE COMPLETION

- ■ FLUSH MOUNT
- ☐ ABOVE GROUND WITH BUMPER POST
- ☐ CONCRETE
- ☐ ASPHALT

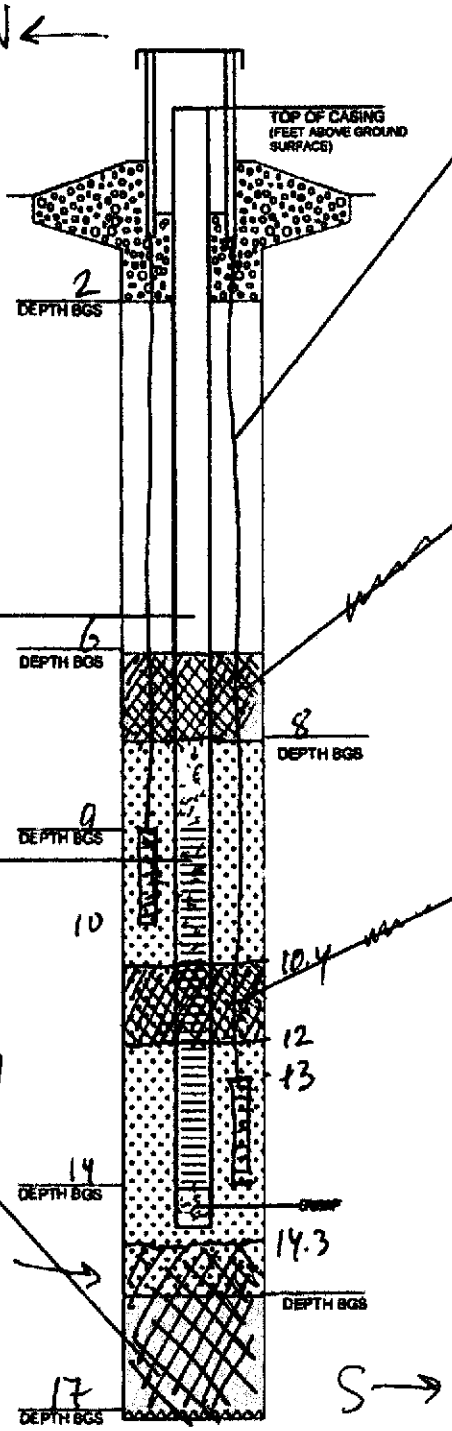

SURVEY INFORMATION

TOC ELEVATION:
GROUND SURFACE ELEVATION:
NORTHING:
EASTING:
DATE SURVEYED:
SURVEY CO.:

ANNULAR SEAL

VOLUME CALCULATED:
AMOUNT USED: 12 gal
- ■ GROUT FORMULA (PERCENTAGES)
  - PORTLAND CEMENT:
  - BENTONITE:
  - WATER:
- ☐ PREPARED MIX
  - PRODUCT:
  - MFG. BY:

METHOD INSTALLED:
- ■ POURED
- ☐ TREMIE
- ☐ OTHER:

BENTONITE SEAL

50 lbs each

VOLUME CALCULATED:
AMOUNT USED: 1 bag (lower), 1 bucket (upper)
- ■ PELLETS, SIZE: 1/4" coated
- ■ CHIPS, SIZE: MEDIUM
- ☐ OTHER:

PRODUCT: PURE GOLD
MFG. BY: CETCO
METHOD INSTALLED:
- ■ POURED
- ☐ TREMIE
- ☐ OTHER:

AMOUNT OF WATER USED:

FILTER PACK

- ☐ PREPACKED FILTER

VOLUME CALCULATED:
AMOUNT USED: 1.5 bags (upper), 1.5 bags (lower)
- ■ SAND, SIZE: #16

PRODUCT: SUPREME SAND
MFG. BY: SILICA RESOURCES, Inc.
METHOD INSTALLED:
- ■ POURED
- ☐ TREMIE
- ☐ OTHER:

WATER LEVEL:
(BTOC AFTER WELL INSTALLATION)

CENTRALIZERS USED?

- ☐ YES
- ■ NO:

CENTRALIZER DEPTHS:

LEGEND

BGS = BELOW GROUND SURFACE
BTOC = BELOW TOP OF CASING
N/A = NOT APPLICABLE
NR = NOT RECORDED
TOC = TOP OF CASING

RECEIVED 2012 MAR -8 AM 11:21 STATE ENGINEER'S OFFICE