WHITE—DIVISION OF WATER RESOURCES
CANARY—CLIENT'S COPY
PINK—WELL DRILLER'S COPY

PRINT OR TYPE ONLY
DO NOT WRITE ON BACK

Schurz NW

STATE OF NEVADA
DIVISION OF WATER RESOURCES

WELL DRILLER'S REPORT

Please complete this form in its entirety in accordance with NRS 534.170 and NAC 534.340

OFFICE USE ONLY 108046
Log No.
Permit No.
Basin 110A
pg1

NOTICE OF INTENT NO. 56584

1. OWNER US Geological Survey - WRD
MAILING ADDRESS 2730 N. Deer Run Rd. Carson City Nv. 89701
ADDRESS AT WELL LOCATION WRIR Tribal Lands NW of Schurz, Nv.

2. LOCATION NE ¼ SW ¼ Sec. 14 T. 13 N S R. 29 E. Mineral County
Waiver # NO. ~~M/O 1442~~ Issued by Water Resources | N/A Parcel No. | N/A Subdivision Name

3. WORK PERFORMED
☑ New Well ☐ Replace ☐ Recondition
☐ Deepen ☐ Abandon ☐ Other

4. PROPOSED USE
☐ Domestic ☐ Irrigation ☐ Test
☐ Municipal/Industrial ☑ Monitor ☐ Stock

5. WELL TYPE
☐ Cable ☑ Rotary ☐ RVC
☐ Air ☐ Other

6. LITHOLOGIC LOG

Material	Water Strata	From	To	Thickness
Tan Fine Sand		0	10	10
Coarse Sand and Small Pea Gravel		10	85	75
Gravelly, Sandy Clay Gives Way To a Clay near 100'		85	100	15
Pea Gravelly Sand		100	110	10
Rock		110	112	2
Gravelly Sand		112	128	16
Gravel		128	150	22

N 38.987537
W 118.819168 NAD27

Date started February 27, 2007
Date complated February 28, 2007

7. WELL TEST DATA
TEST METHOD: ☐ Bailer ☐ Pump ☐ Air Lift

G.P.M.	Draw Down (Feet Below Static)	Time (Hours)
GPS	Location	
38 59	14.8	NAD 83
118 49	12.5	
Land Surface	Elevation	4190 (GPS)
Accuracy	± 14 Feet	

8. WELL CONSTRUCTION
Depth Drilled 150 Feet Depth Cased 110 and 145 Feet

HOLE DIAMETER (BIT SIZE)

	From	To
8 1/2 Inches	0 Feet	150 Feet
Inches	Feet	Feet
Inches	Feet	Feet

CASING SCHEDULE

Size O.D. (Inches)	Weight/Ft. (Pounds)	Wall Thickness (Inches)	From (Feet)	To (Feet)
2	Sch 80	0.218	0	100 shallow
2	Sch 80	0.218	0	135 deep

Perforations:
Type perforation Factory Slot
Size perforation 0.020 inch
From 100 feet to 110 feet shallow
From 135 feet to 145 feet deep
From feet to feet
From feet to feet
From feet to feet

Surface Seal: ☑ Yes ☐ No
Depth of Seal 0 To 94
Placement Method: ☑ Pumped ☐ Poured
Seal Type: ☐ Neat Cement ☐ Cement Grout ☐ Concrete Grout
Pure Gold Grout
Gravel Packed: ☑ Yes ☐ No
From 94' To 115' ~~feet to~~ and 130' to 150' feet

9. WATER LEVEL
Static water level Deep = 79.45 feet below land surface
~~Artesian flow~~ Shallow = 31.10 G.P.M. P.S.I.
Water temperature Cold °F Quality

10. DRILLER'S CERTIFICATION
This well was drilled under my supervision and the report is true to the best of my knowledge.
Name R.N. Pennington
Contractor
Address 2730 N. Deer Run Rd.
Contractor
Carson City, Nv 89701
Nevada contractor's license number issued by the State Contractor's Board
Nevada driller's license number issued by the Division of Water Resources, the on-site driller FP 1857
Signed R.N. Pennington
By driller performing actual drilling on site or contractor
Date 3-7-07

(Rev. 12-01) USE ADDITIONAL SHEETS IF NECESSARY (O)-627

Log# 108046 pg

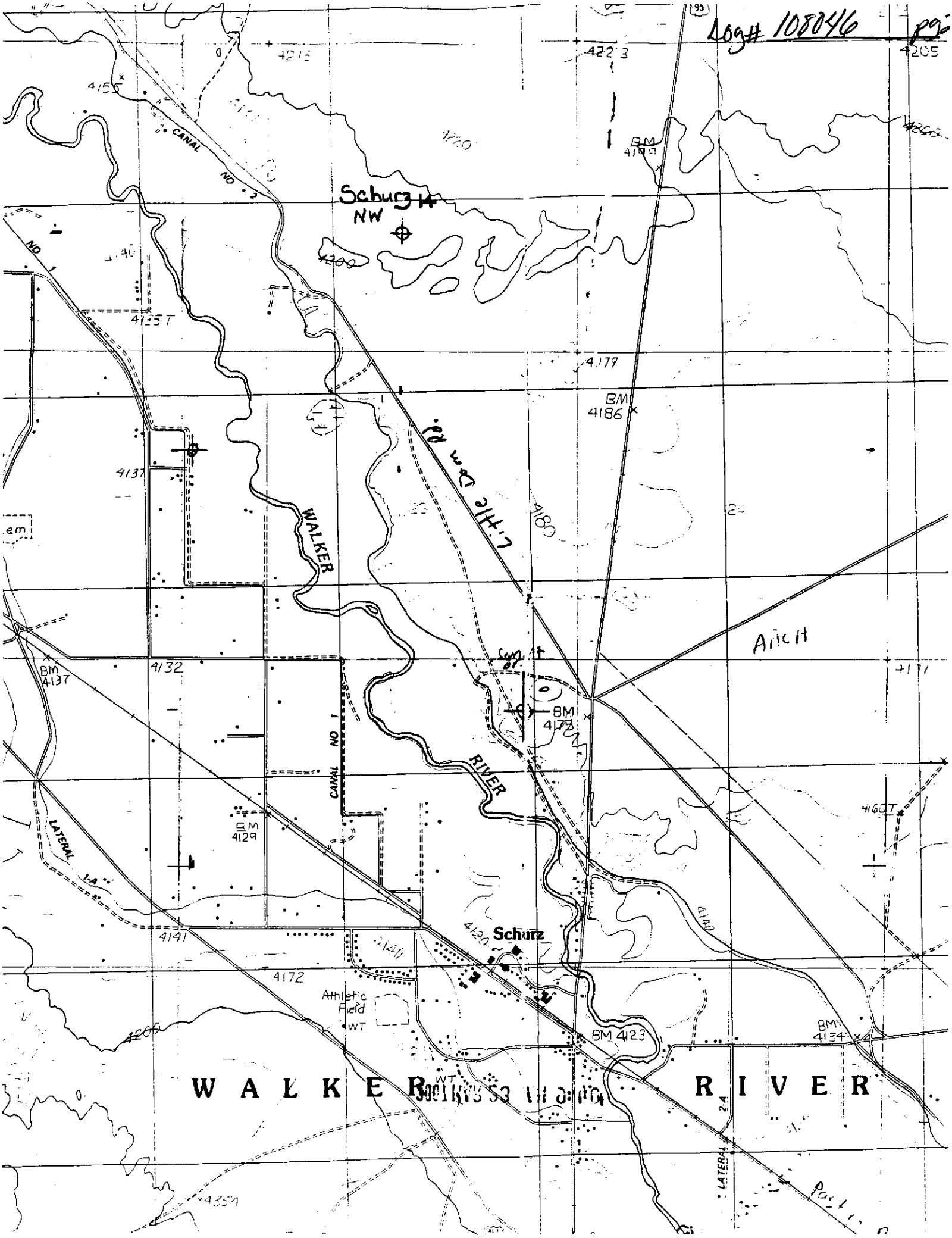

Log# 1080416 pg3

Schurz NW

T13N R29E Sec 14 NESW

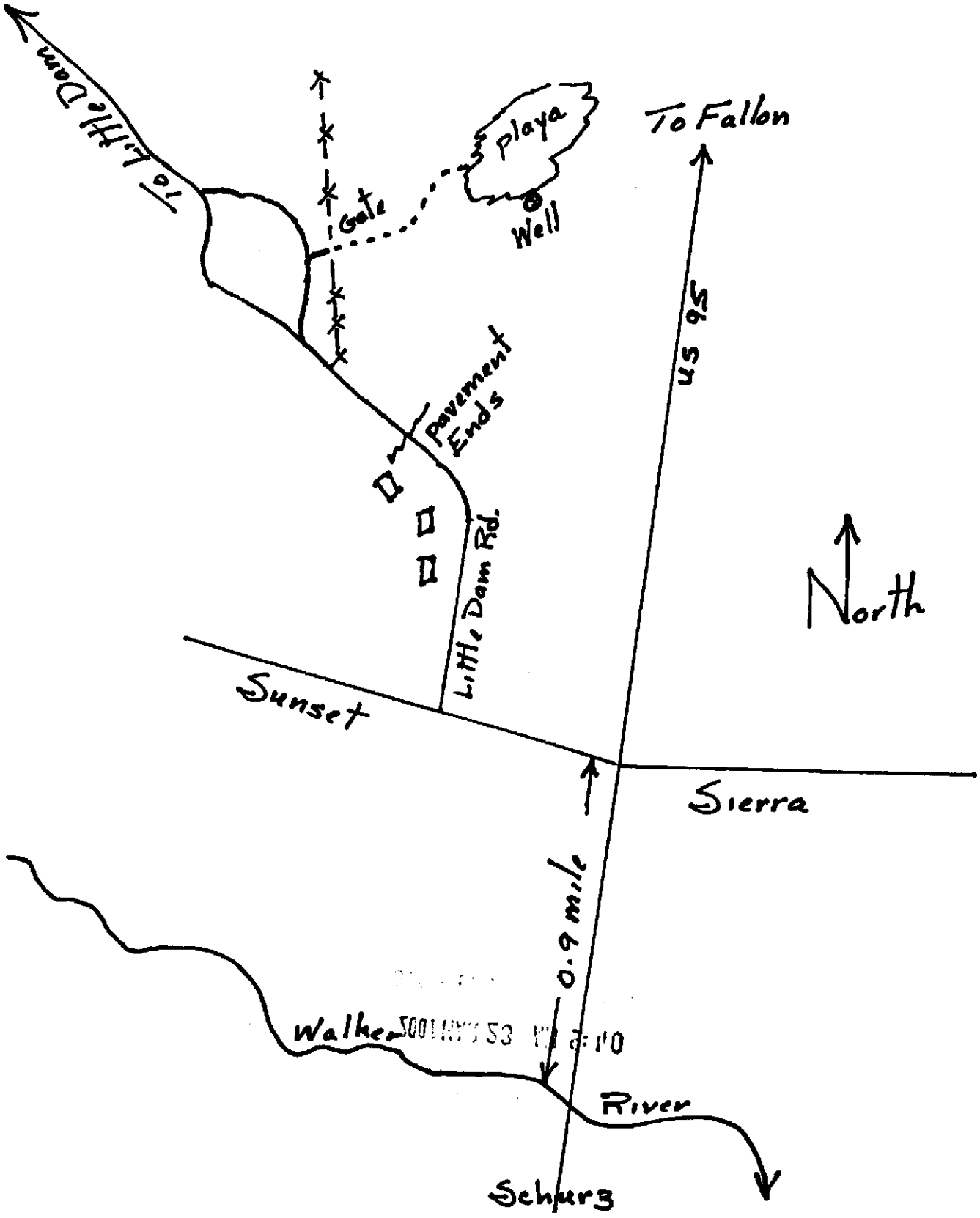

Shurz NW well

Log # ~~1080416~~ ~~pg 4~~

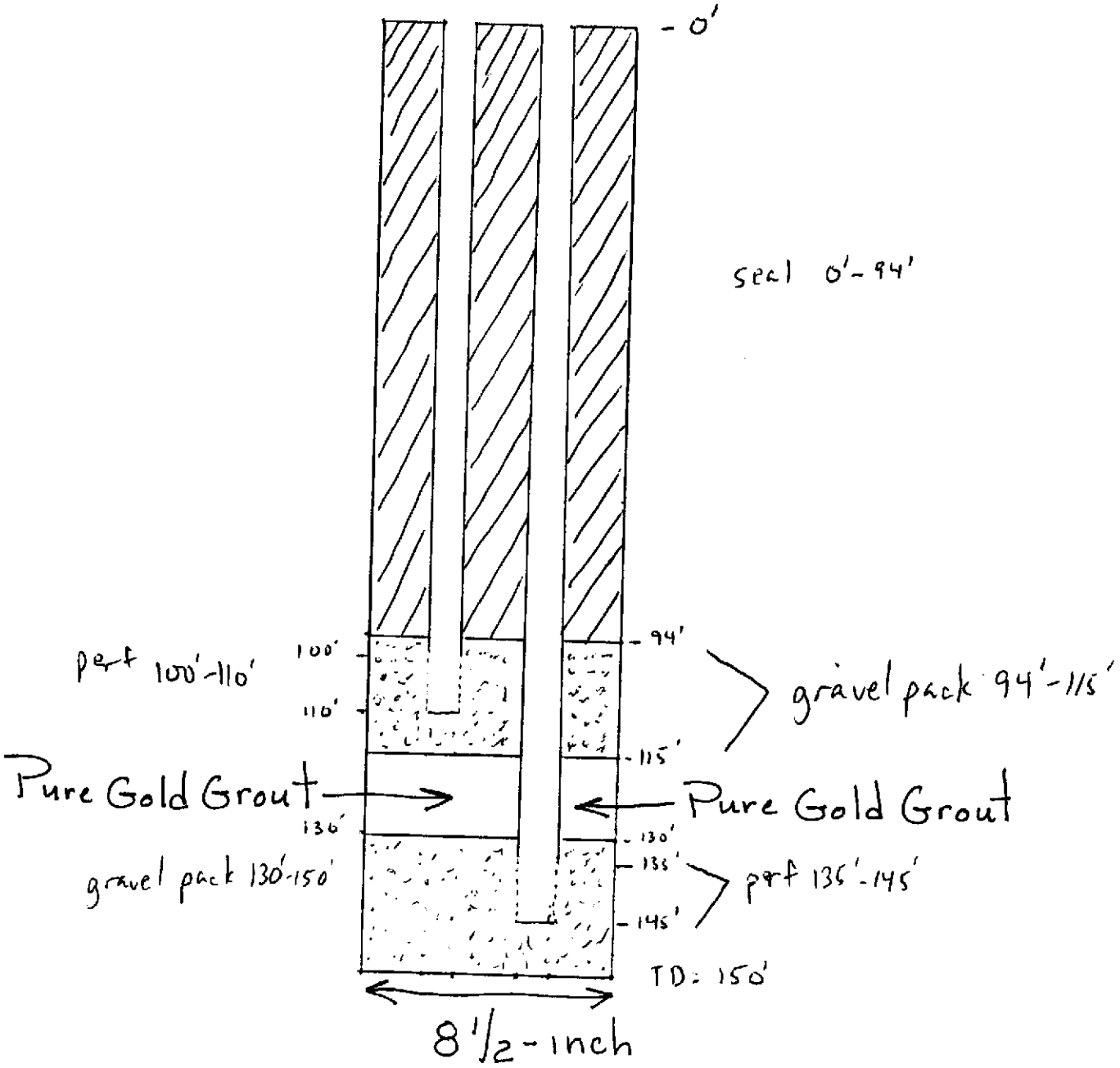

Not to scale