WELL LOG AND REPORT TO THE STATE ENGINEER OF NEVADA

PLEASE COMPLETE THIS FORM IN ITS ENTIRETY

Log No. 5468
Rec. Nov. 7 19 60
Well No.
Permit No. 18414
Do not fill in

Owner: Sierra Pacific Power Co. Ww. # 5 Driller: Layne Texas Co.

Address: 220 Virginia St. - Reno, Nevada Address: 542 Lawndale Lic. No. 5573

Location of well: S.E. 1/4 N.W. 1/4 Sec. 8, T. 19 N/S, R. 20 E, in Washoe County

or Poplar Street well - Mulherron Property, 1 1/2 Blks N of Glendale Rd on Poplar St.

Water will be used for: Municipal Water Supply Total depth of well: 665'

Size of drilled hole: 34" underreamed Weight of casing per linear foot: 40#

Thickness of casing: 7/8" Temp. of water: 68°F

Diameter and length of casing: 437' of 20" OD and 245' of 12 3/4"
(Casing 12" in diameter and under give inside diameter; casing 12" in diameter give outside diameter.)

If flowing well give flow in c.f.s. or g.p.m. and pressure: Flowing + 9.68' above Ground

If nonflowing well give depth of standing water from surface

If flowing well describe control works
(Type and size of valve, etc.)

Date of commencement of well: 7-18-59 Date of completion of well: 9-11-59

Type of well rig: Rotary.

LOG OF FORMATIONS

From feet	To feet	Thickness feet	Type of material
See Enclosed Sheets.			
			See Test Data in File. 18414.

(OVER)

Water-bearing Formation, Casing Perforations, Etc.

Chief aquifer (water-bearing formation)

from 453 to 645 ft.

Other aquifers

First water at feet.

Casing perforated

from 453 to 645 ft.

Size of perforations

SSWW, .045 Gk, 3-Row

LOG OF FORMATIONS—*Continued*

From feet	To feet	Thickness	Type of material

CASING RECORD

Diam. casing	From feet	To feet	Length	"Remarks"—Seals, Grouting, Etc.

GENERAL INFORMATION—Pumping Test, Quality of Water, Etc.

WELL DRILLER'S STATEMENT

This well was drilled under my jurisdiction and the above information is true to my best information and belief.

Signed [illegible] Well Driller

By Layne Texas Co.

License No.

Dated 10-31-, 1960

(Not to be filled in by Driller)

1960 NOV 7 AM 11 15

OFFICE ENGINEER

FORM NO. 28

LAYNE TEXAS COMPANY

HOUSTON -:- DALLAS

REPORT NO. 5373
S. O. 8000-59
~~BXXXX~~ 2486
FILE NO.
DATE

WELL LOG

CUSTOMER LOCATION	WELL DATA
FOR SIERRA PACIFIC POWER COMPANY	NAME WELL TEST #6 WELL NO. 6
LOCATION WELL POPULAR STREET - RENO	ELEVATION DATUM
	RT C GR
SURVEY FIELD SPARKS	TEST HOLE SIZE 7-7/8" TD 752'
	DATE STARTED DRILLING 7-18-59
	DATE FINISHED DRILLING 7-21-59
COUNTY WASHOE STATE NEVADA	DRILLER C.M.BRYANT RIG NO. 7
	TYPE MUD BAROID NO. SACKS 150 BAROID+
OTHER LAND MARKS	ELECTRIC LOG YES TYPE SCHLUM. 38 SKS. GEL
	SURVEY MICRO TYPE SCHLUM.
	OTHER TEMPERATURE

DEPTH STRATA	EACH STRATUM	DESCRIPTION FORMATION	SAMPLES DEPTH	SAMPLES TYPE	SAMPLES NUMBER
0		SURFACE			
76		SURFACE PIPE			
78	2	CLAY			
89	11	SAND & GRAVEL			
95	6	SAND, GRAVEL & THIN CLAY STREAKS			
104	9	SAND & GRAVEL			
111	7	CLAY			
127	16	SAND & GRAVEL			
148	21	FINE SAND & GRAVEL			
154	6	SAND & GRAVEL			
170	16	SAND, GRAVEL & YELLOW CLAY			
175	5	BROWN CLAY & GRAVEL			
180	5	SAND & FINE GRAVEL			
183	3	CLAY & BOULDERS			
200	17	CEMENTED SAND & GRAVEL			
215	15	SAND & GRAVEL & BLUE CLAY			
235	20	SAND & GRAVEL (LOOSE)			
245	10	SAND, GRAVEL & BOULDERS			
256	11	CEMENTED SAND & GRAVEL			
271	15	BLUE CLAY & SMALL BOULDERS			
289	18	BLUE CLAY & GRAVEL			
312	23	SANDY BLUE CLAY & GRAVEL			
342	30	BLUE CLAY			
350	8	BLUE CLAY & SAND STREAKS			
358	8	SANDY BLUE CLAY			
365	7	BLUE CLAY			
390	25	BLUE CLAY & GRAVEL			
398	8	BLUE CLAY			
405	7	SAND, GRAVEL & STREAKS OF BLUE CLAY			
408	3	BLUE CLAY			
418	10	SAND, GRAVEL & CLAY - BROKEN			
453	35	SAND, GRAVEL & BLUE CLAY			
470	17	SAND, GRAVEL & CLAY STREAKS (GOOF)			
476	6	BLUE CLAY			
508	32	SAND, GRAVEL, FEW CLAY STREAKS (CUT GOOD)			
510	2	BLUE CLAY			
530	20	SAND, GRAVEL & CLAY STREAKS (GOOD)			
531	1	BLUE CLAY			

FORM NO. 28

LAYNE TEXAS COMPANY

HOUSTON -:- DALLAS

REPORT NO. 5373
S. O. 8000-59
PAGE
FILE NO. 2486
DATE

WELL LOG

CUSTOMER LOCATION

FOR SIERRA PACIFIC POWER COMPANY

LOCATION WELL POPULAR ST. - RENO

SURVEY FIELD SPARKS

COUNTY WASHOE STATE NEVADA

OTHER LAND MARKS

WELL DATA

NAME WELL TEST #6 WELL NO. 6

ELEVATION DATUM

RT C GR

TEST HOLE SIZE 7-7/8 TD 752'

DATE STARTED DRILLING 7-18-59

DATE FINISHED DRILLING 7-21-59

DRILLER C.M.BRYANT RIG NO. 7 (150 BAROID

TYPE MUD BAROID NO. SACKS +38 SK[illegible]EL

ELECTRIC LOG YES TYPE SCHLUM

SURVEY MICRO TYPE SCHLUM

OTHER TEMPERATURE

DEPTH STRATA	EACH STRATUM	DESCRIPTION FORMATION	SAMPLES DEPTH	SAMPLES TYPE	SAMPLES NUMBER
541	10	SAND, GRAVEL & CLAY STREAKS			
543	2	CLAY WITH HARD STREAKS			
568	25	SAND & GRAVEL WITH A FEW CLAY & HARD STREAKS			
572	4	CLAY & HARD STREAKS			
577	5	SAND & GRAVEL			
582	5	CLAY WITH HARD STREAKS			
593	11	SAND, GRAVEL & CLAY STREAKS			
595	2	CLAY WITH HARD STREAKS			
610	15	SAND, GRAVEL & HARD STREAKS			
617	7	CLAY & SAND STREAKS			
629	12	SAND, GRAVEL & THIN CLAY STREAKS			
633	4	CEMENTED GRAVEL			
646	13	SAND & GRAVEL			
647	1	CLAY			
654	7	SAND & GRAVEL WITH A FEW CLAY STREAKS			
660	6	CLAY & GRAVEL			
674	14	SAND & GRAVEL			
677	3	SANDY CLAY			
702	25	CLAY, SAND & GRAVEL			
705	3	SANDY CLAY			
713	8	SAND, GRAVEL & CLAY STREAKS			
716	3	SANDY CLAY			
736	20	SAND & GRAVEL			
747	11	SAND, GRAVEL 7 CLAY BREAKS			
748	1	CLAY			
752	4	SAND & GRAVEL			
		WATER SAMPLE 7-24-59			
		PACKER SET AT 627'			
		SCREENED 634-644			
		JETTED FOR 5 HOURS @ 25 GPM -TEMP. 74°F.			
		W.L. + 10' ABOVE GROUND LEVEL.			

FORM NO. 1202

LAYNE TEXAS COMPANY

HOUSTON -:- DALLAS

MATERIAL SETTING

REPORT NO. 5374
S. O. 8000-59
PAGE OF
FILE NO. 2486
DATE

CUSTOMER LOCATION	WELL DATA
FOR SIERRA PACIFIC POWER COMPANY	NAME WELL TEST #6 WELL NO. 6
LOCATION WELL POPULAR ST. - RENO	ELEVATION DATUM
	TYPE WELL GRAVEL WALL
SURVEY FIELD SPARKS	SURFACE CASING CEMENTED YES NO SACKS 460
	SIZE HOLE UNDERREAMED 34" DEPTH 665
	GRAVEL TYPE BIRDS EYE NO. CU. YDS. 85
COUNTY WASHOE STATE NEVADA	TYPE SCREEN SS. BARLUG WW GAGE .045
	DRILLER C.M. BRYANT RIG NO. 7
OTHER LAND MARKS	OTHER

DEPTH	LENGTH	SIZE, KIND, WEIGHT MATERIAL
0		SURFACE
34'	34'	30" OD SURFACE PIPE
360'		TOP OF 12-3/4" OD LINER
437'	437'	20" OD 5/16" WALL CASING
453'	90'	12-3/4" OD BLANK LINER
593'	140'	12-3/4" OD S.S. W.W. .045 GA. BAR LUGGED SCREEN
615'	22'	12-3/4" OD BLANK LINER
645'	30'	12-3/4" OD S.S. W.W. .045 GA. BAR LUGGED SCREEN
663'	18'	12-3/4" OD BLANK LINER
665'	2'	12-3/4" OD SET NIPPLE W.W.P. & B.P.V.
		TOTAL DEPTH - 665'
	NOTE:	4 - 12 x 34" SPRING GUIDES USED IN UNDERREAMED HOLE 2 - SETS OF WELD ON 20 x 12" GUIDES USED INSIDE 12" CASING.
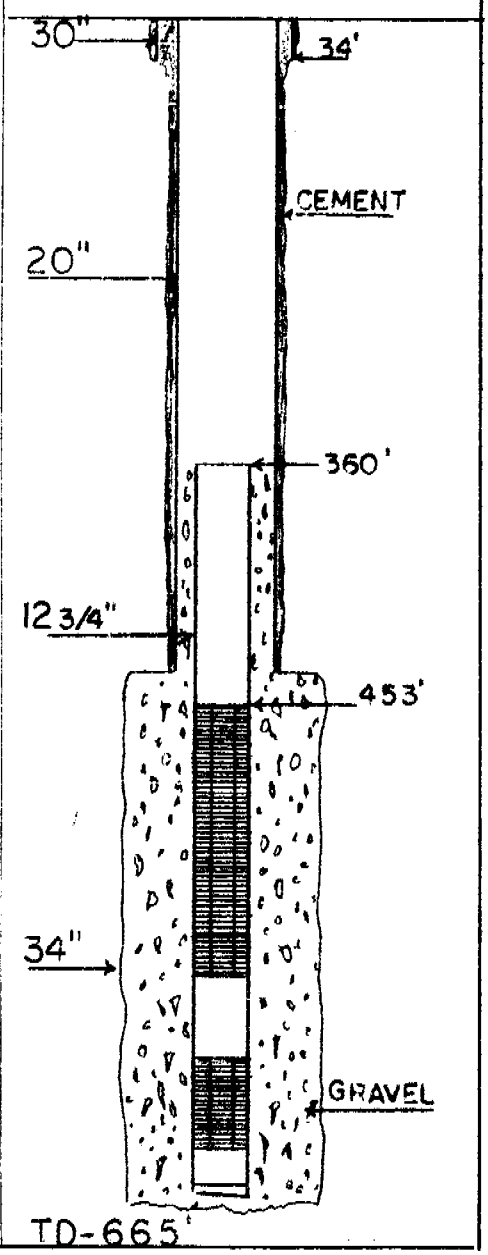
SKETCH