SITE OVERVIEW OF PROPOSED DIVERSION STRUCTURE

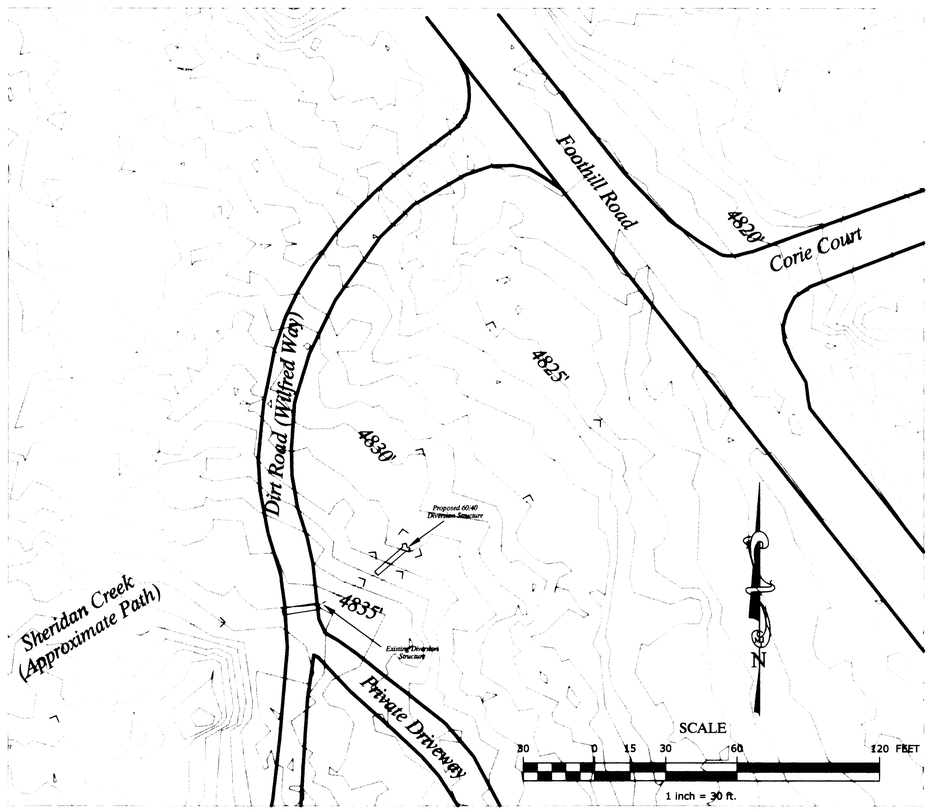

LEGEND

- ROADWAY
- EXISTING SHERIDAN CREEK FLOW PATH
- PROPOSED SHERIDAN CREEK FLOW PATH
- EXISTING DIVERSION STRUCTURE
- PROPOSED DIVERSION STRUCTURE
- TREE TO BE REMOVED
- CONTOURS - INTERVAL = 1' Obtained from Douglas County GIS Dept.

DETAIL VIEW OF DIVERSION STRUCTURE

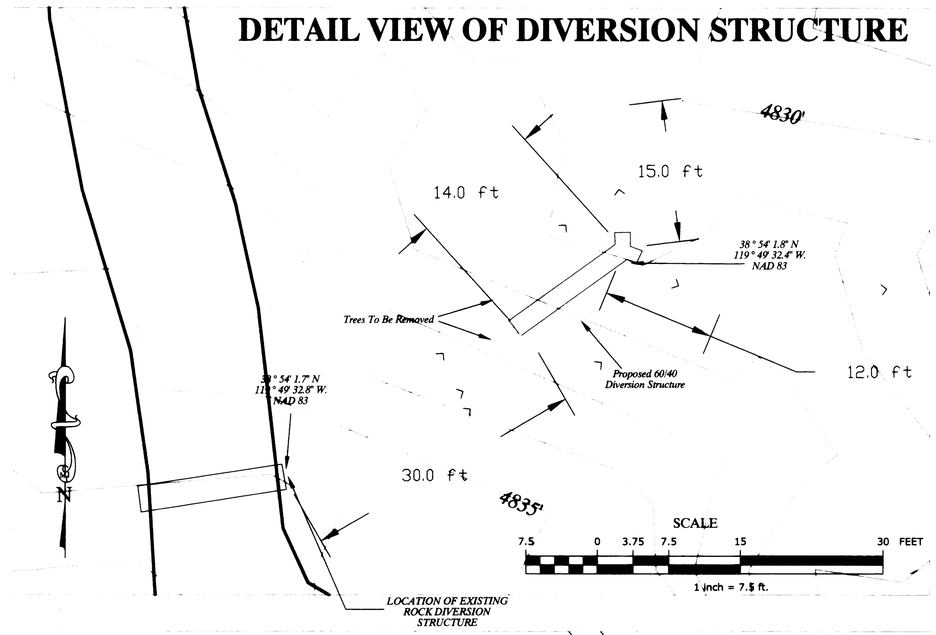

AREA LOCATION MAP

SCALE 0.25 0 0.125 0.25 0.5 1 MILE

NOTE: This Area Location Map was taken from a portion Of 1968 USGS Quadrangle Map for MINDEN, NEV. - CALIF.

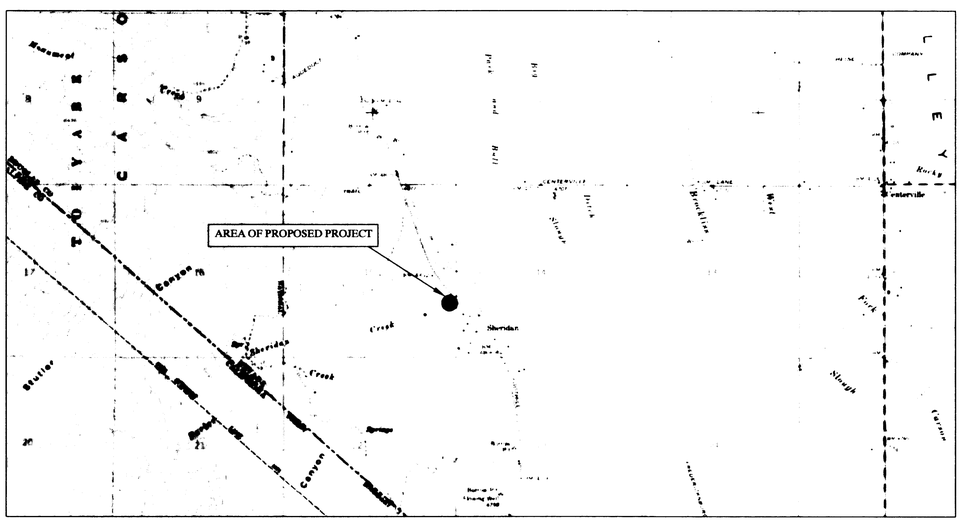

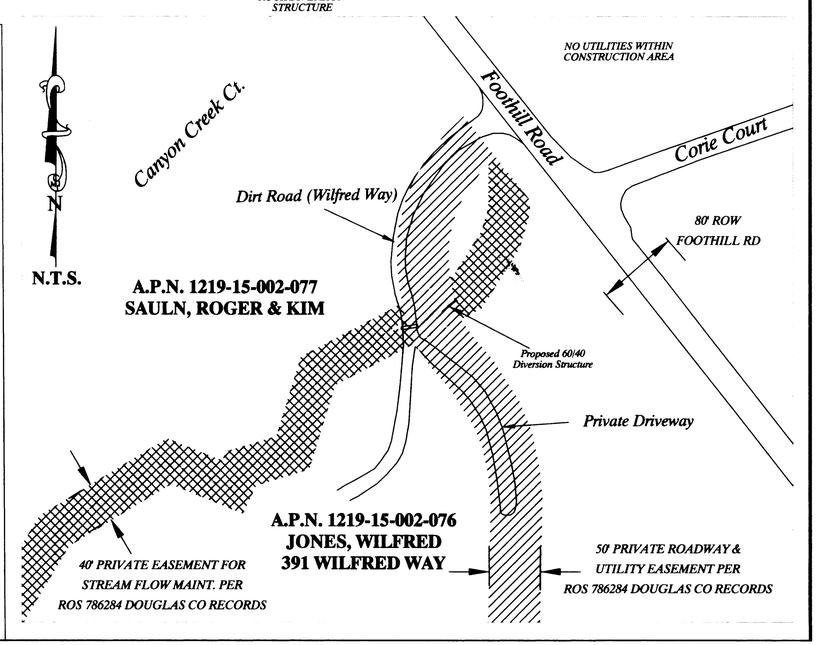

REVISIONS:	BY:
R-01 2/11/2016	MAS

This project is located at Douglas County APN 1219-15-002-077.

These drawing consisting of four sheets have been printed on 2/11/2016 and are considered "FINAL"

OVERVIEW OF PROJECT AREA FOR PROPOSED SHERIDAN CREEK 60 / 40 DIVERSION BOX PER MOTT CREEK et al DECREE DATED 9/29/2014.

FILED FEB 16 2016 DOUGLAS COUNTY ENGINEER'S OFFICE

STATE OF NEVADA PROFESSIONAL ENGINEER MICHAEL A. STANKA Exp. 6-30-16 CIVIL

Stanka Consulting, LTD
A Professional Engineering Company
3032 Silver Sage Drive, Suite 101
Carson City NV 89701
(775) 885-9283
michael@stankaconsulting.com
www.stankaconsulting.com

PROPOSED DIMENSIONS OF DIVERSION BOX - SHEET 1 OF 4

SHEET: 1 OF 4 SHEETS

RECEIVED 2016 FEB 16 PM 3:57

V06264 V06362 V06360 V06357 V06356 V06347 V06340 V06339 V06336 V06312 V06309 V06306

PLAN AND PROFILE VIEW OF PROPOSED DIVERSION STRUCTURE

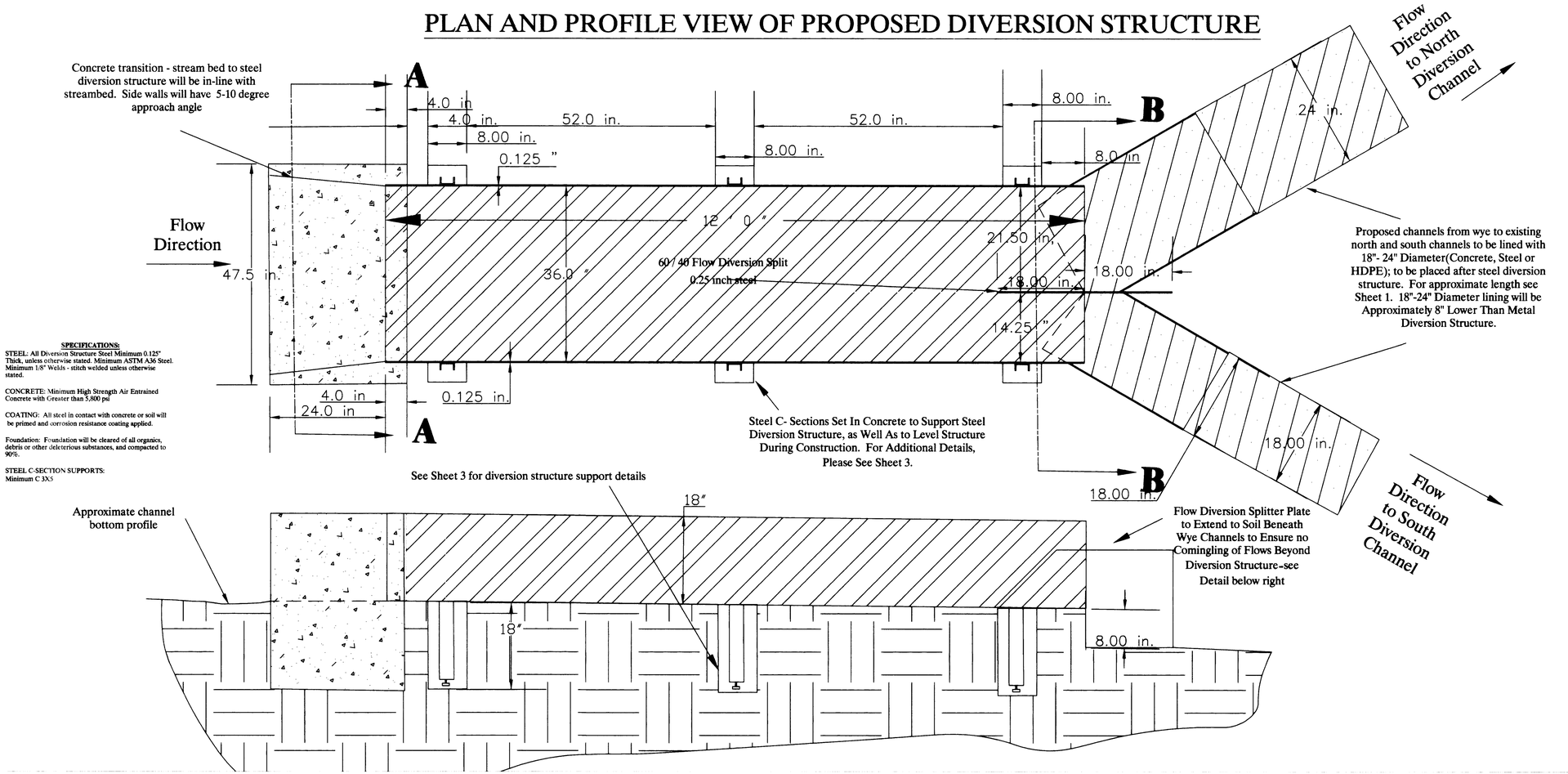

SPECIFICATIONS:

STEEL: All Diversion Structure Steel Minimum 0.125" Thick, unless otherwise stated. Minimum ASTM A36 Steel. Minimum 1/8" Welds - stitch welded unless otherwise stated.

CONCRETE: Minimum High Strength Air Entrained Concrete with Greater than 5,800 psi

COATING: All steel in contact with concrete or soil will be primed and corrosion resistance coating applied.

Foundation: Foundation will be cleared of all organics, debris or other deleterious substances, and compacted to 90%.

STEEL C-SECTION SUPPORTS: Minimum C 3X5

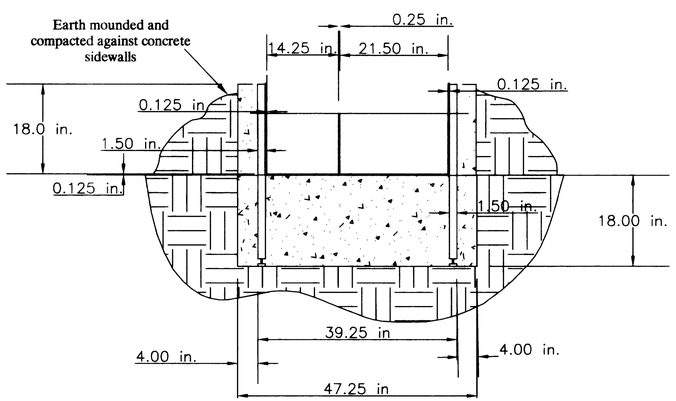

SECTION A-A

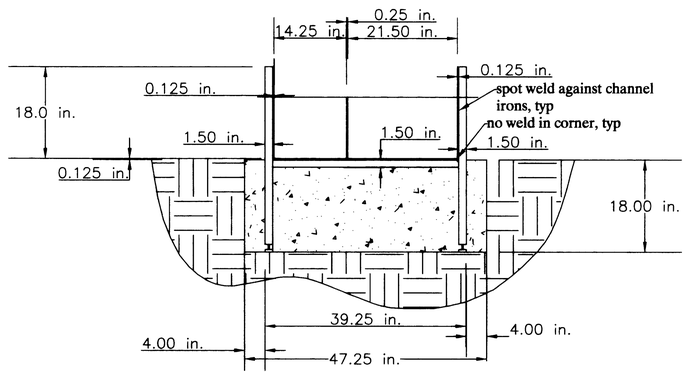

SECTION B-B

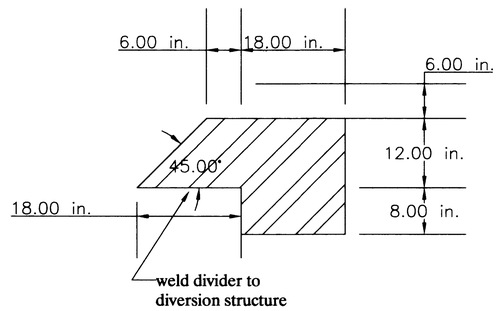

SPLITTER PLATE DETAIL

Stanka Consulting, LTD
A Professional Engineering Company

3032 Silver Sage Drive, Suite 101
Carson City NV 89701
(775) 885-9283
michael@stankaconsulting.com
www.stankaconsulting.com

SCALE
1 0 0.5 1 2 4 FEET
1 inch = 1 ft.

REVISIONS:	BY:
R-01 2/11/2016	MAS

SHERIDAN CREEK
60 / 40 DIVERSION BOX

FILED FEB 16 2016

RECEIVED 05 FEB 16 PM 3:57

SHEET: 2 OF 4 SHEETS

V06264 V06362 V06360 V06357 V06356 V06347 V06340 V06339 V06336 V06312 V06309 V06306

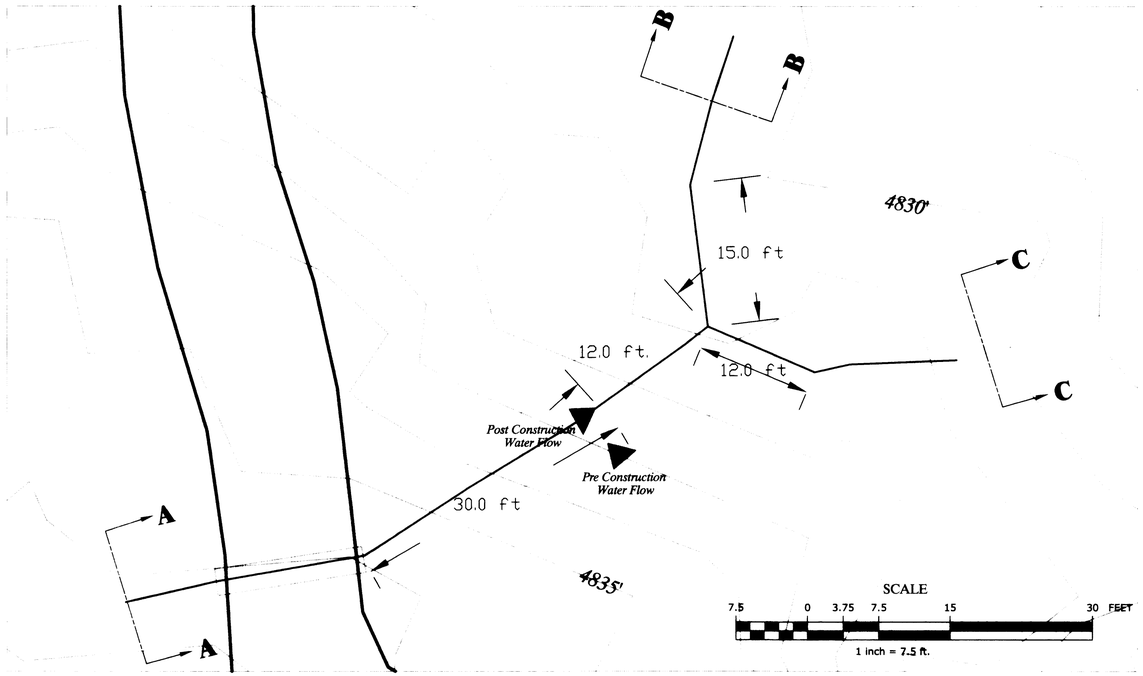

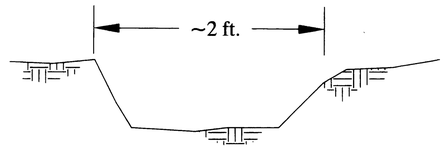

CREEK CROSS SECTION A-A
MAIN CHANNEL-APPROXIMATE

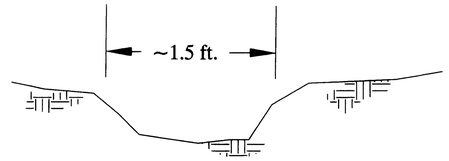

CREEK CROSS SECTION B-B
NORTH DIVERSION-APPROXIMATE

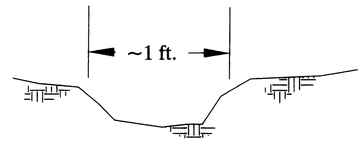

CREEK CROSS SECTION C-C
SOUTH DIVERSION-APPROXIMATE

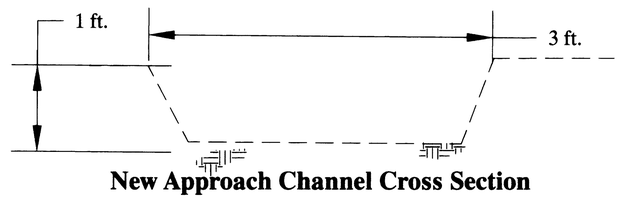

New Approach Channel Cross Section

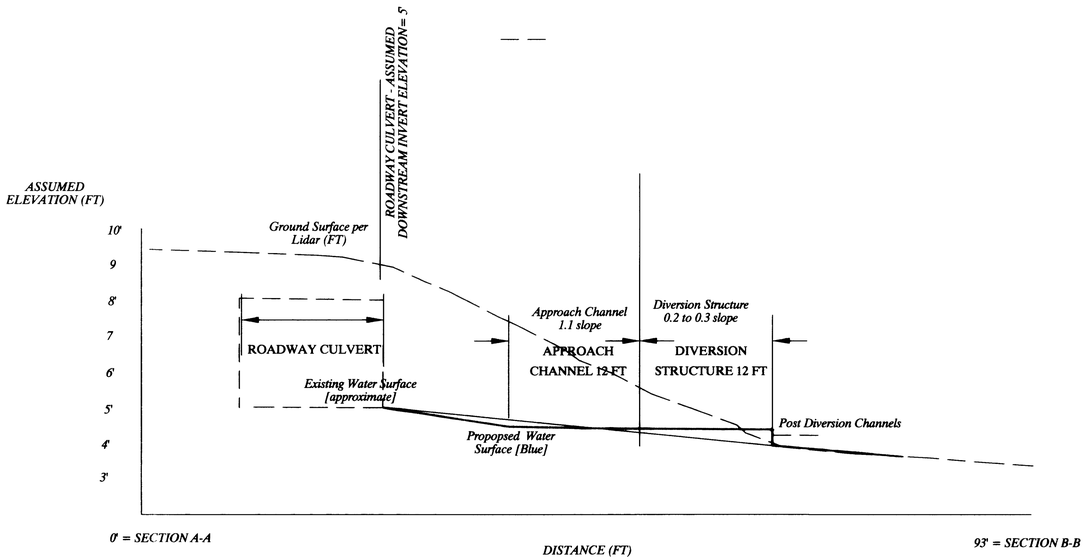

NOTE: ALL ELEVATIONS AND ELEVATION DIFFERENCES ARE ASSUMED AND WILL BE VERIFIED AT THE TIME OF CONSTRUCTION

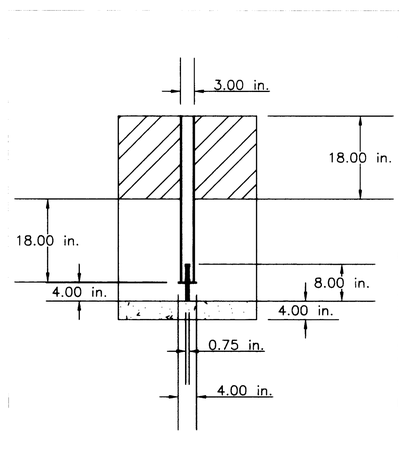

SUPPORT DETAIL- VIEW PERPENDICULAR TO STRUCTURE

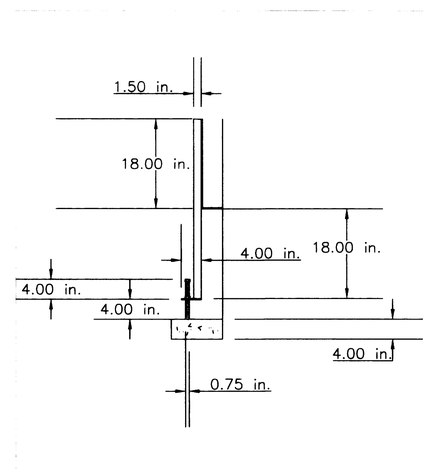

SUPPORT DETAIL- VIEW PARALLEL TO STRUCTURE

Stanka Consulting, LTD
A Professional Engineering Company

3032 Silver Sage Drive, Suite 101
Carson City NV 8970
(775) 885-9283
michael@stankaconsulting.com
www.stankaconsulting.com

REVISIONS:	BY:
R-01 2/11/16	MAS

PROFESSIONAL ENGINEER STATE OF NEVADA MICHAEL A. STANKA Exp. 6-30-16 ENVIRONMENTAL No. 18316 2/11/2016

SHERIDAN CREEK 60 / 40 DIVERSION BOX

RECEIVED 2016 FEB 16 PM 3:57

FILED FEB 16 2016 STATE ENGINEER'S OFFICE

S

SHEET: 3 OF 4 SHEETS

V06264 V06362 V06360 V06357 V06356 V06347 V06340 V06339 V06336 V06312 V06309 V06306

V06264 V06362 V06360 V06357 V06356 V06347 V06340 V06339 V06336 V06312 V06309 V06306

PLAN VIEW OF PROPOSED DIVERSION STRUCTURE

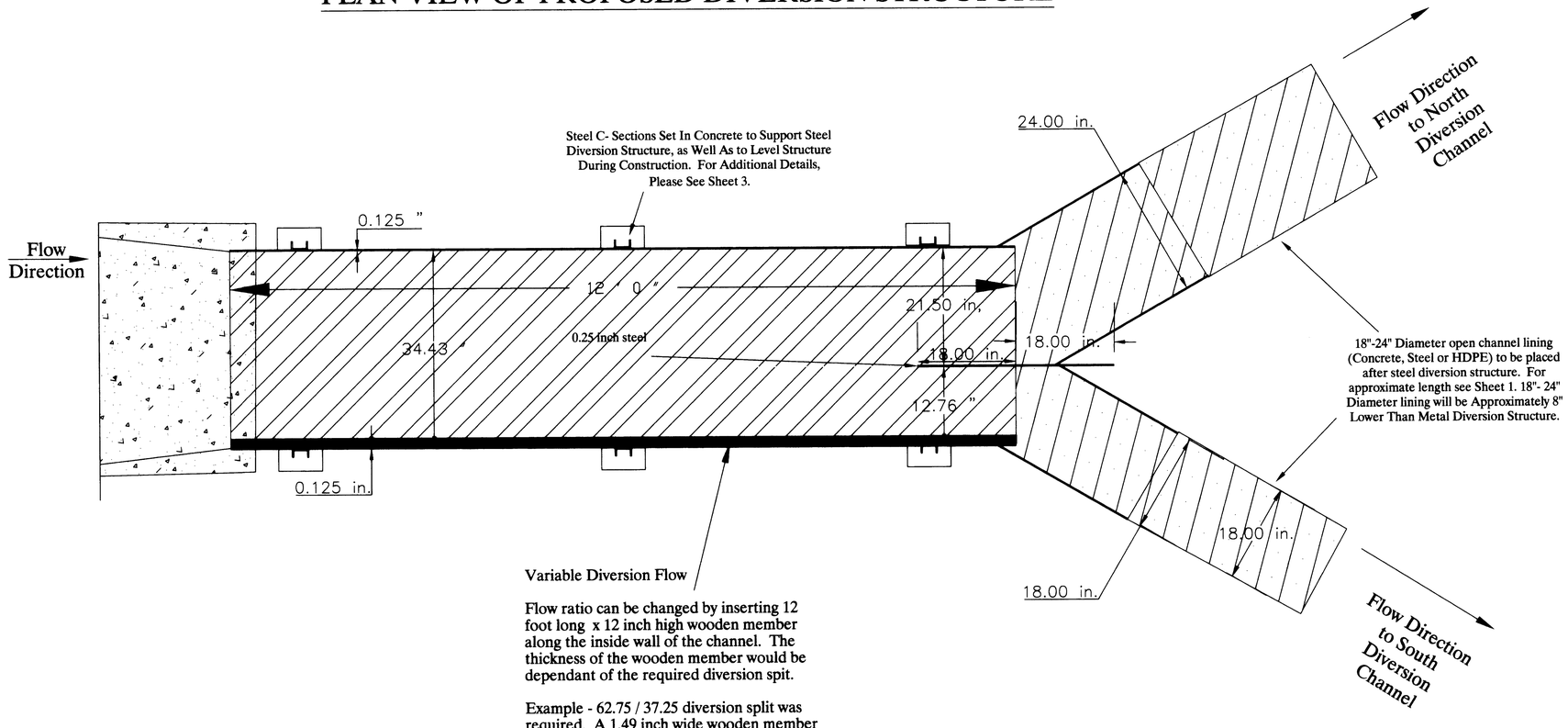

Variable Diversion Flow

Flow ratio can be changed by inserting 12 foot long x 12 inch high wooden member along the inside wall of the channel. The thickness of the wooden member would be dependant of the required diversion spit.

Example - 62.75 / 37.25 diversion split was required. A 1.49 inch wide wooden member would be installed resulting in one diversion still being 21.50 inches wide and the other being reduced from 14.25 inches to 12.76 inches. This would result in a 62.75 / 37.25 split.

SCALE

1 0 0.5 1 2 4 FEET

1 inch = 1 ft.

Stanka Consulting, LTD
A Professional Engineering Company

3032 Silver Sage Drive, Suite 101
Carson City NV 89701
(775) 885-9283
michael@stankaconsulting.com
www.stankaconsulting.com

FILED
FEB 16 20
STATE ENGINEER'S OFFICE

REVISIONS:	BY:
R-01 2/11/2016	MAS

PROFESSIONAL ENGINEER STATE OF NEVADA
MICHAEL A. STANKA
Exp. 12-16
ENVIRONMENTAL
No. 18313
2-11-16

SHERIDAN CREEK 60 / 40 DIVERSION BOX - Variable

RECEIVED
2016 FEB 16 PM 3:50
STATE ENGINEER'S OFFICE