STATE OF NEVADA,
COUNTY OF CLARK SS.

I, SALVADOR ESTRADA, BEING DULY SWORN, DEPOSE AND SAY THAT THIS MAP, CONSISTING OF 1 SHEET, HAS BEEN CORRECTLY DRAWN TO THE DESIGNATED SCALE FROM A GLOBAL POSITIONING SYSTEM (G.P.S.) SURVEY MADE BY ME, OR UNDER MY SUPERVISION AND DIRECTION, ON **16 JAN 1996**, THAT IT TRULY AND CORRECTLY REPRESENTS THE PROPOSED LOCATION AND EXTENT OF THE WORKS USED TO DIVERT WATER FROM SPRING **N-59(BIRD SPR.)**, IN CLARK COUNTY, BY THE UNITED STATES DEPARTMENT OF THE INTERIOR, BUREAU OF LAND MANAGEMENT, FOR **STOCKWATERING AND DOMESTIC** PURPOSES. THAT THE PROPOSED POINT OF DIVERSION, THE APPROXIMATE LOCATION AND SIZE OF THE DIVERTING CHANNEL OR OTHER CONDUIT, THE PLACE AND MANNER OF USE, AND THE LOCATION AND NAMES OF ALL OTHER WORKS OR STREAMS WHICH ARE CROSSED BY, OR CONNECTED WITH THE SAID WORKS ARE FULLY AND CORRECTLY DESIGNATED THEREON.

STATE WATER RIGHT SURVEYOR NO. 740

SUBSCRIBED AND SWORN TO BEFORE ME THIS 2 DAY OF April, 1996
NOTARY PUBLIC IN AND FOR CLARK COUNTY, NEVADA.

NOTARY PUBLIC STATE OF NEVADA County of Clark Karen Sue Jewell My Appointment Expires Aug 11, 1996

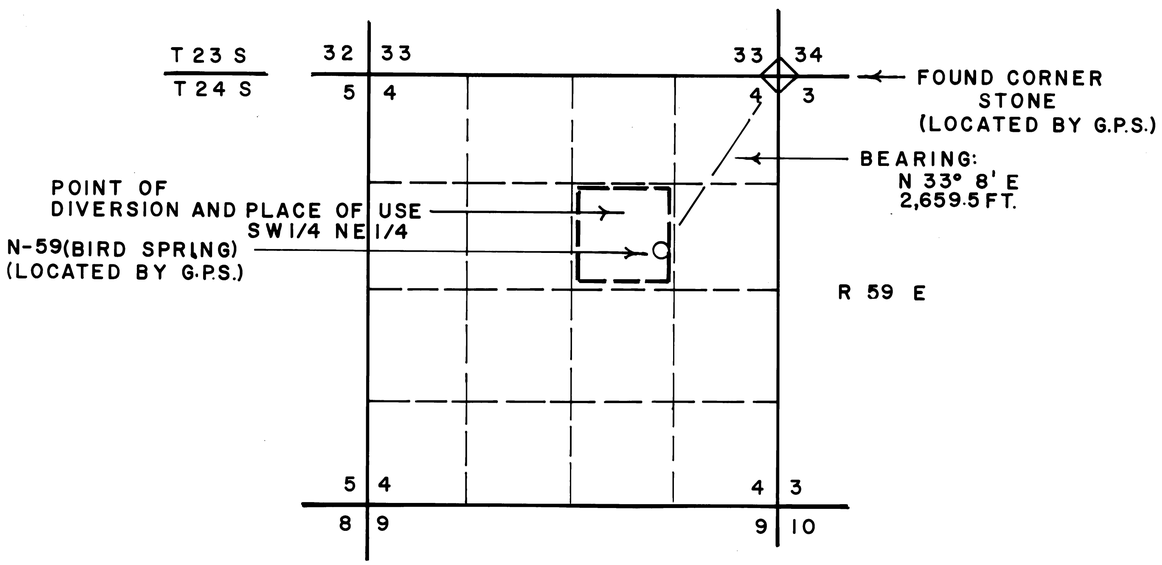

BASIS OF BEARING WAS DETERMINED FROM THE INVERSE BETWEEN GEOGRAPHIC COORDINATES AND IS REFERENCED TO THE TRUE MERIDIAN. GEOGRAPHIC COORDINATE VALUES (NAD 27) WERE OBTAINED BY DIRECT G.P.S. OBSERVATIONS. G.P.S. COORDINATE VALUES HAVE AN ACCURACY OF ± 3 FEET.

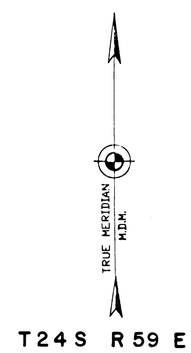

G.P.S. COORDINATE VALUES

N-59 BIRD SPRING
LAT. 35° 53' 20.398" N
LONG. 115° 22' 12.714" W

NE COR. SEC.4, T24S, R59E
LAT. 35° 53' 42.339" N
LONG. 115° 21' 54.883" W

1000 0 1000 2000 3000 4000 5000 6000
SCALE: 1"=1000'

STATE ENGINEER'S USE

FILED APR 24 1996 STATE ENGINEER'S OFFICE

MAP TO ACCOMPANY
CLAIM OF PUBLIC WATER RESERVE
AND PROOF OF APPROPRIATION

FOR: **STOCKWATERING AND DOMESTIC PURPOSES**
BY: U.S. DEPARTMENT OF THE INTERIOR BUREAU OF LAND MANAGEMENT
FROM: **N-59 BIRD SPRING**

U.S. DEPARTMENT OF THE INTERIOR
BUREAU OF LAND MANAGEMENT
LAS VEGAS DISTRICT, NEVADA

DRAWING NO. D011619A