82815 T

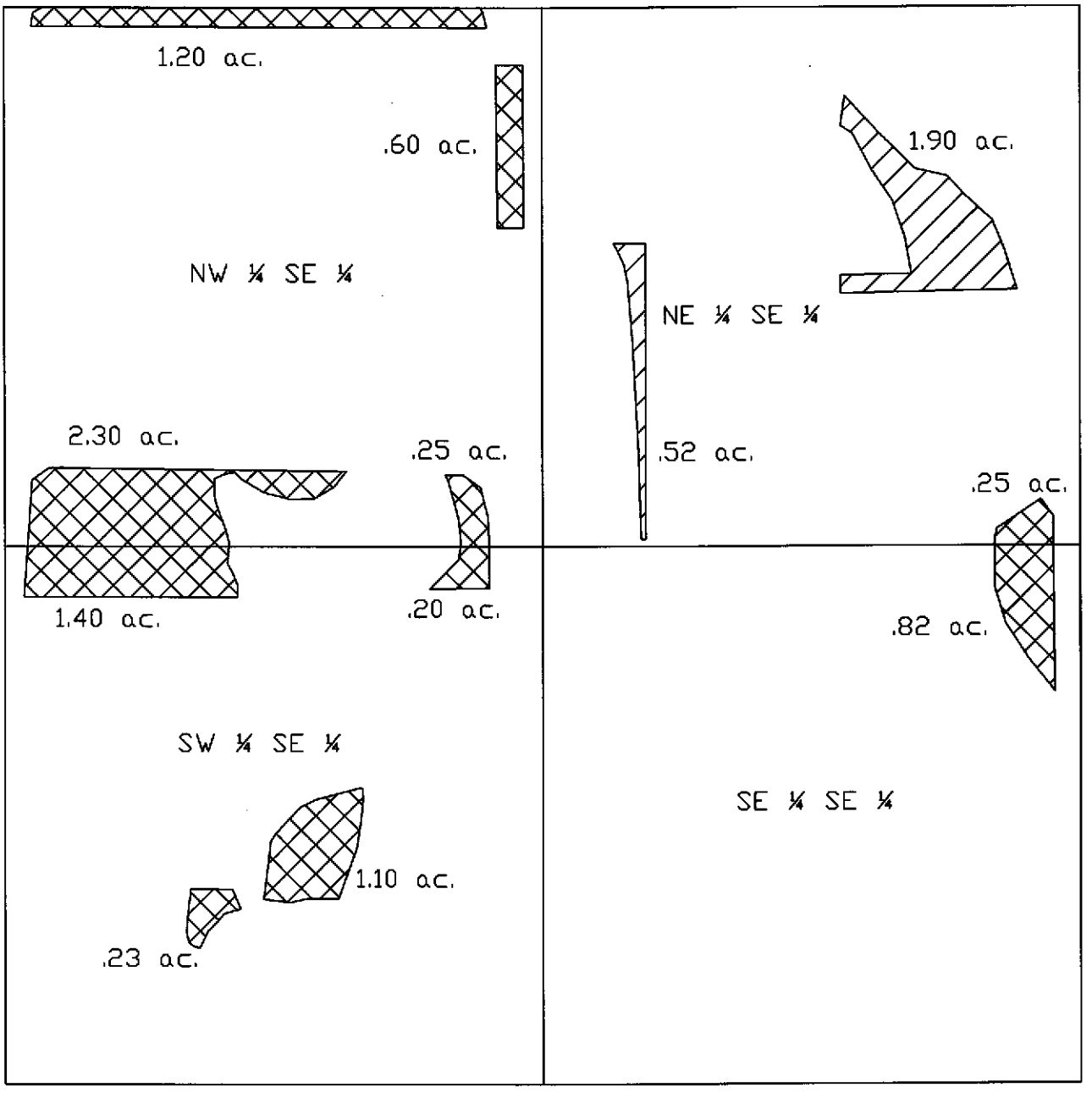

Sec. 18, T19N., R30E., M.D.B.&M.

T.C.I.D. Serial # 781-1

Existing place of use

Proposed place of use

FILED
MAY 20 2013
STATE ENGINEER'S OFFICE

RECEIVED
2013 MAY 20 AM 11:39
STATE ENGINEERS OFFICE

82815 T

82815 T

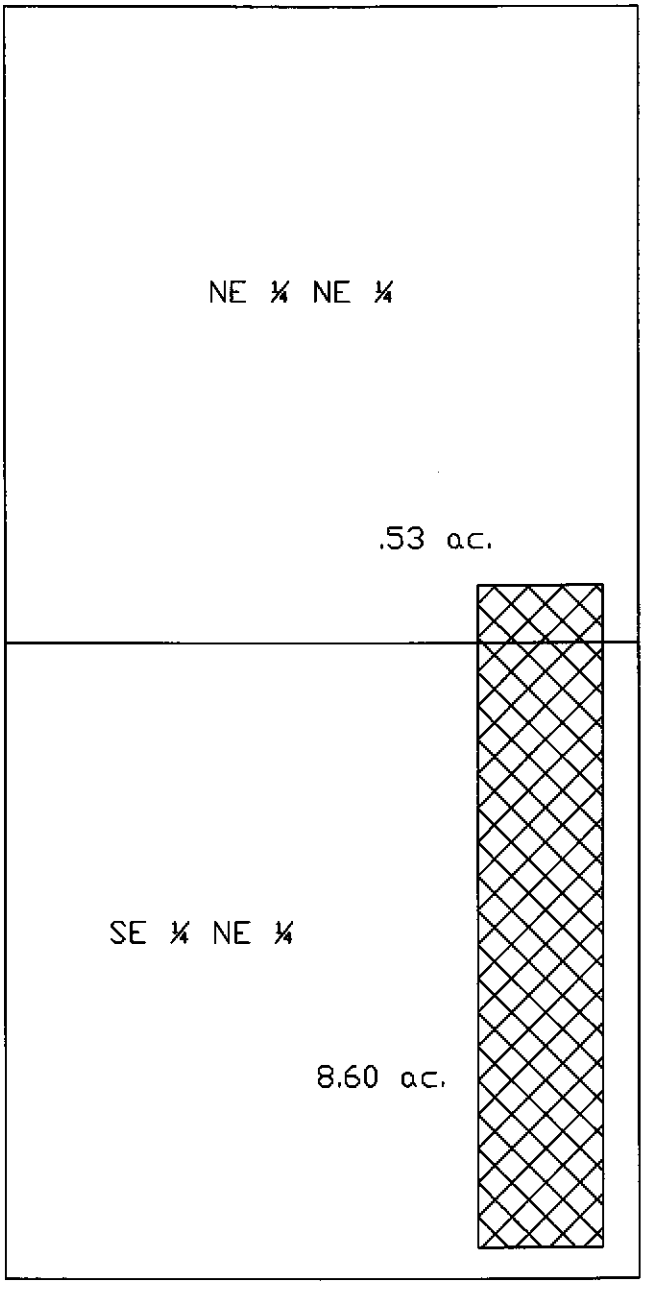

Sec. 35, T19N., R29E., M.D.B.&M.

T.C.I.D. Serial # 738-4-C & 738-4-D

Proposed place of use

RECEIVED
2013 MAY 20 AM 11:40
STATE ENGINEERS OFFICE

FILED
MAY 20 2013
STATE ENGINEER'S OFFICE

82815 T

82815 T

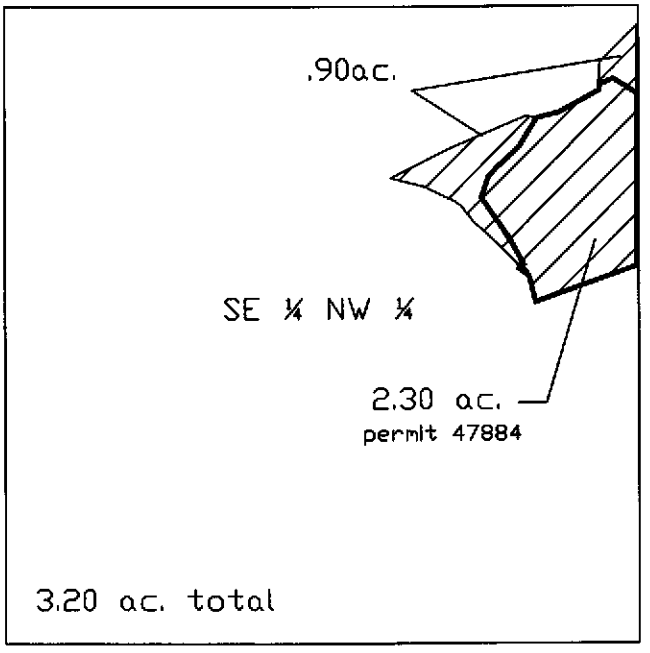

Sec. 33, T19N., R28E., M.D.B.&M.
T.C.I.D. Serial # 593-A

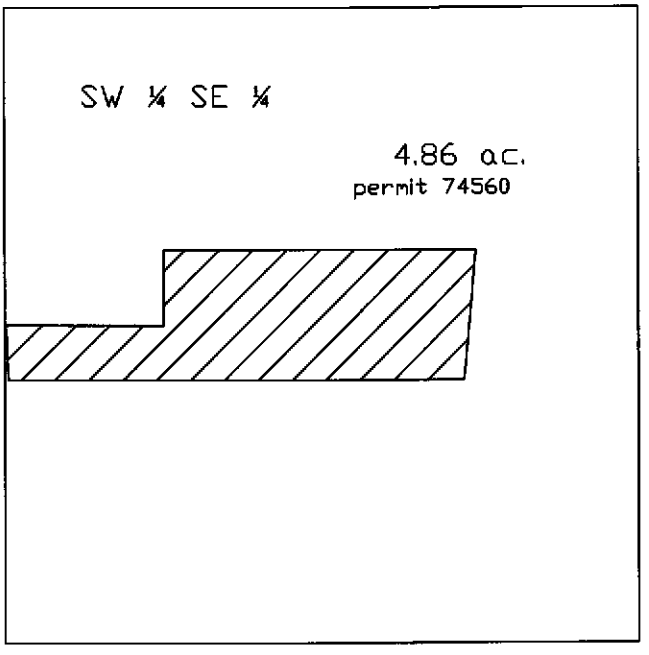

Sec. 22, T19N., R29E., M.D.B.&M.
T.C.I.D. Serial # 2155-A

RECEIVED
2013 MAY 20 AM 11:39
STATE ENGINEERS OFFICE

FILED
MAY 20 2013
STATE ENGINEER'S OFFICE

Existing place of use

82815 T

82815 T

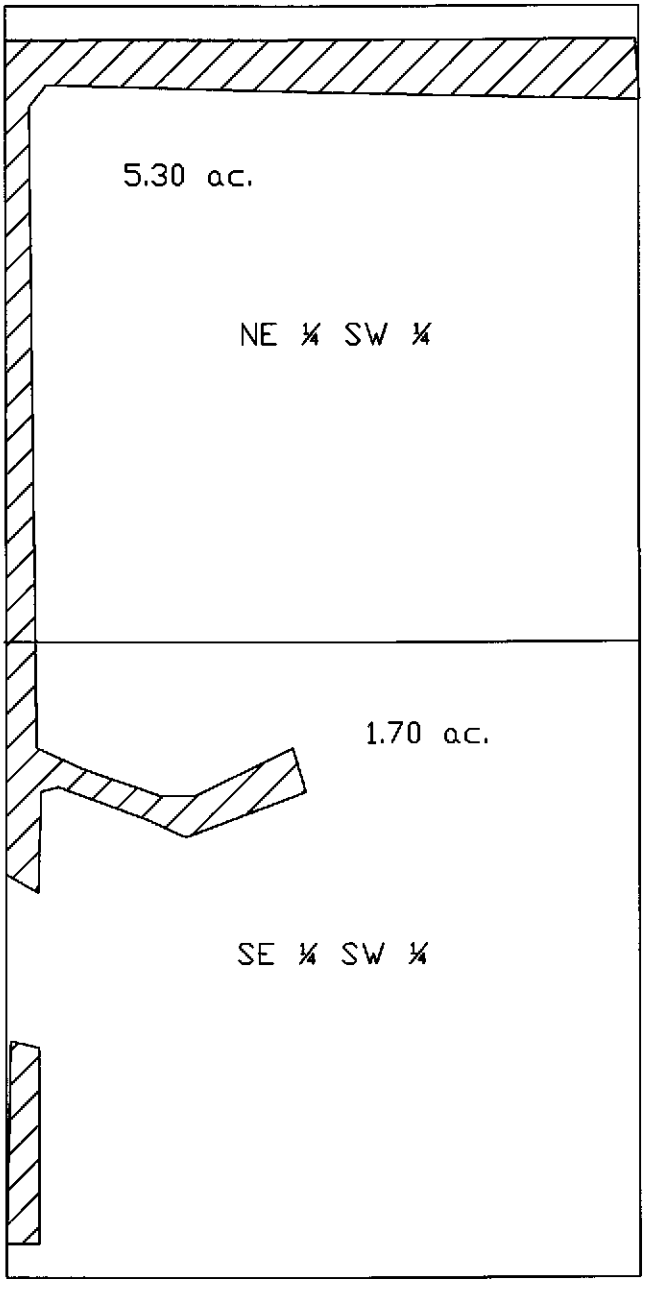

RECEIVED
2013 MAY 20 AM 11:39
STATE ENGINEERS OFFICE

Sec. 26, T19N., R29E., M.D.B.&M.

T.C.I.D. Serial # 694-2-A

Existing place of use

FILED
MAY 20 2013
STATE ENGINEER'S OFFICE

82815 T