82802 T

4

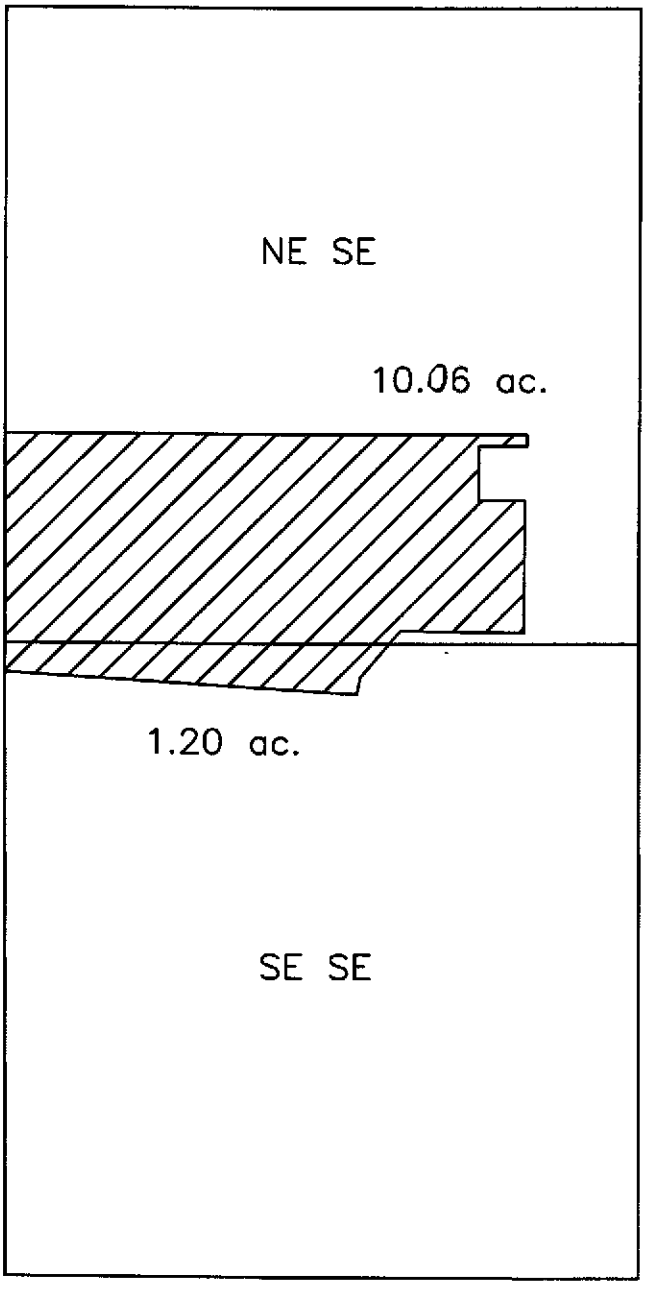

RECEIVED
2013 MAY 13 AM 11:41
STATE ENGINEERS OFFICE

Sec. 12, T18N., R28E., M.D.B.&M.
T.C.I.D. Serial No's 131-1-A-6 & 131-1-A-6-A

FILED
MAY 13 2013
STATE ENGINEER'S OFFICE

Existing place of use
TEMPORARY MAP TO ACCOMPANY
APPLICATION TO CHANGE THE PLACE
OF USE OF A PORTION
FOR DECREED USE

Existing Place of Use
11.26 acres

83701 T

82802 T

4

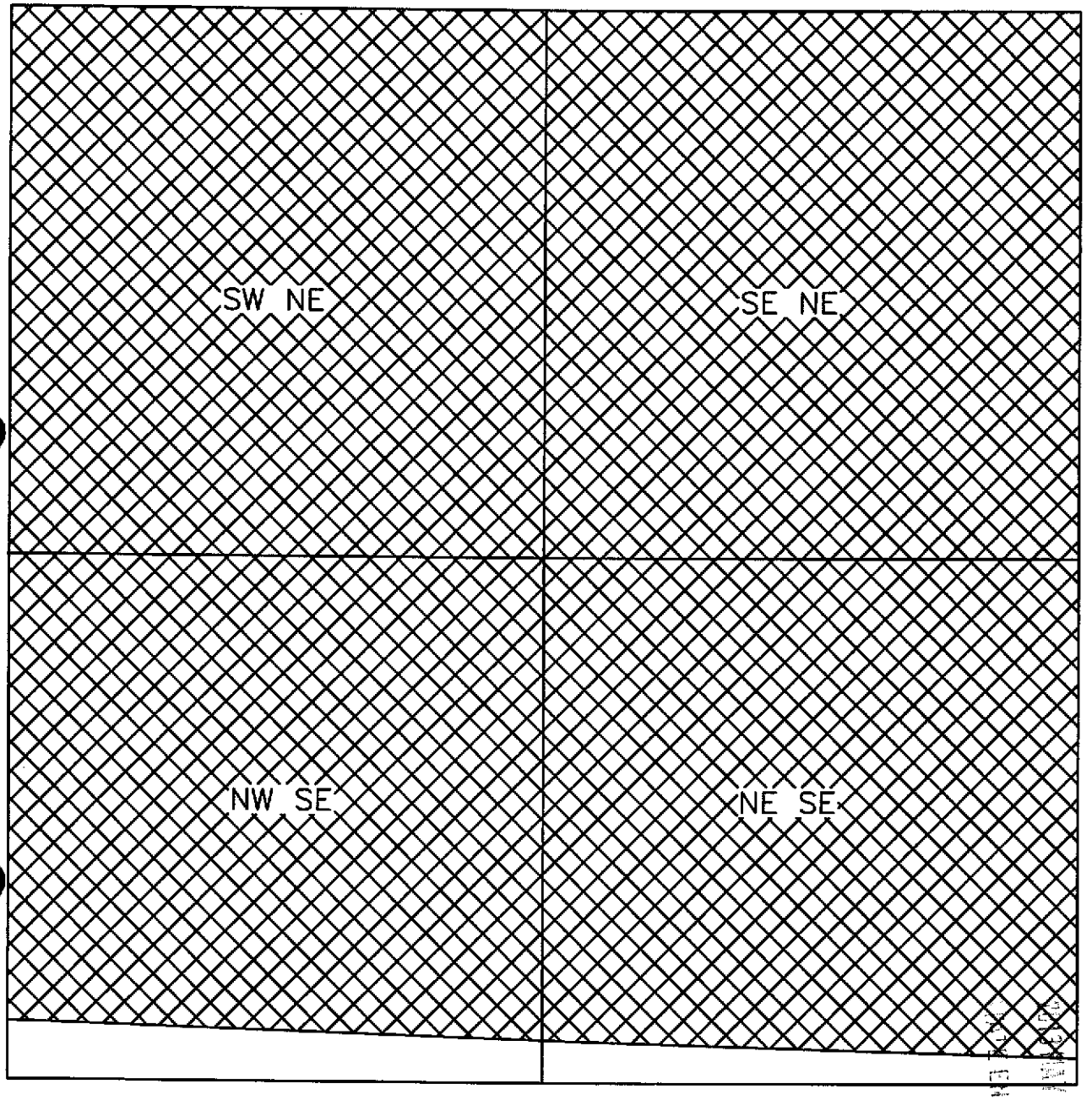

Sec. 25, T18N., R28E., M.D.B.&M.
T.C.I.D. Serial No165
153.12 Acres decreed

FILED
MAY 13 2013
STATE ENGINEER'S OFFICE

Proposed place of use
TEMPORARY MAP TO ACCOMPANY
APPLICATION TO CHANGE THE PLACE
OF USE OF A PORTION
FOR DECREED USE

Proposed Place of Use
Allocation for 11.26 acres to suppliment
Proposed place of use because of drought.

83701 T