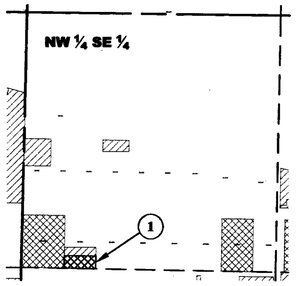

SECTION 10,
TOWNSHIP 20 NORTH,
RANGE 24 EAST,
M.D.B.&M.

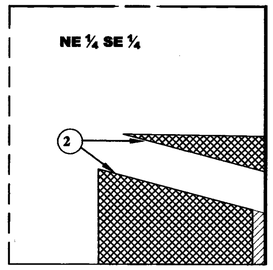

SECTION 10,
TOWNSHIP 20 NORTH,
RANGE 24 EAST,
M.D.B.&M.

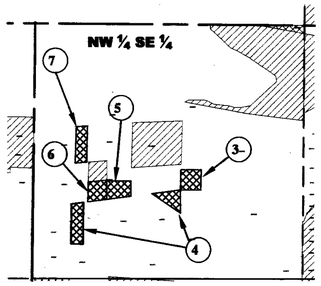

SECTION 12,
TOWNSHIP 20 NORTH,
RANGE 24 EAST,
M.D.B.&M.

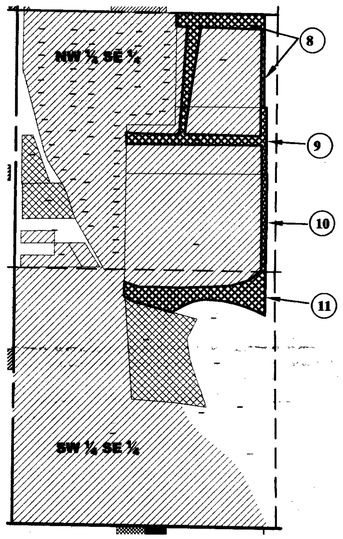

SECTION 14,
TOWNSHIP 20 NORTH,
RANGE 24 EAST,
M.D.B.&M.

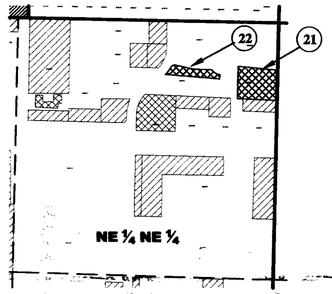

SECTION 19,
TOWNSHIP 20 NORTH,
RANGE 25 EAST,
M.D.B.&M.

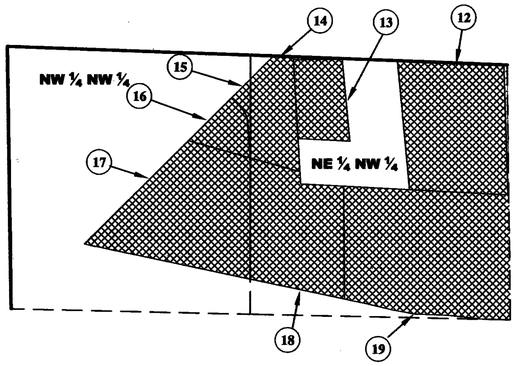

SECTION 18,
TOWNSHIP 20 NORTH,
RANGE 25 EAST,
M.D.B.&M.

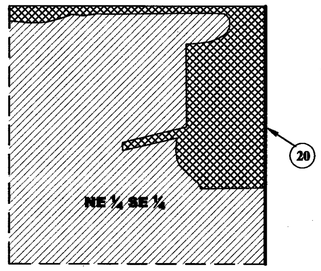

SECTION 19,
TOWNSHIP 20 NORTH,
RANGE 25 EAST,
M.D.B.&M.

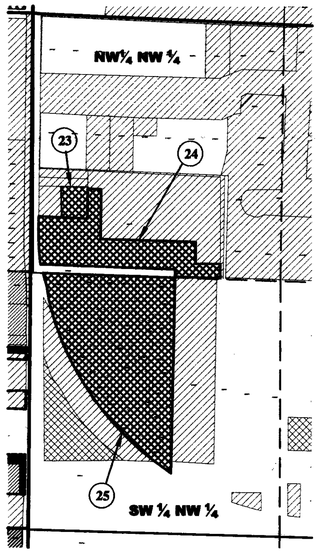

SECTION 19,
TOWNSHIP 20 NORTH,
RANGE 25 EAST,
M.D.B.&M.

STATE OF NEVADA
COUNTY OF CARSON CITY } SS

I, MICHAEL A. STANKA, BEING FIRST DULY SWORN, DEPOSE AND SAY THAT THIS MAP, CONSISTING OF ONE SHEET HAS BEEN CORRECTLY DRAWN TO THE DESIGNATED SCALE, UNDER MY SUPERVISION AND DIRECTION, RELYING UPON ANALYSIS OF RECORDED SURVEY DOCUMENTS AND OTHER DOCUMENTS IN THE LYON COUNTY RECORDER'S OFFICE, THE TRUCKEE CARSON IRRIGATION DISTRICT, THE US BUREAU OF RECLAMATION, AND THE NEVADA DIVISION OF WATER RESOURCES. THAT THIS MAP TRULY AND CORRECTLY REPRESENTS THE EXISTING AND PROPOSED PLACE OF USE OF A PORTION OF TRUCKEE RIVER CLAIM NUMBER THREE, AS DESCRIBED IN THAT PARTICULAR DOCUMENT ENTITLED UNITED STATES VS. ORR DITCH COMPANY ET AL, FOR MUNICIPAL AND DOMESTIC PURPOSES BY THE CITY OF FERNLEY.

Michael A. Stanka, SWRS # ~~1182~~

SUBSCRIBED AND SWORN TO BEFORE
ME, THIS 21st DAY OF October, 2009.

NOTARY PUBLIC IN AND FOR
Carson City County, NV

MY COMMISSION EXPIRES
December 10, 2012

DAVID G. HILLIS JR.
NOTARY PUBLIC
STATE OF NEVADA
My Appt. Exp. Dec. 10, 2012
No.88-8829-3

PROPOSED PLACE OF USE

THE PROPOSED PLACE OF USE IS THE CITY OF FERNLEY AS DESCRIBED ON THE MAP SUBMITTED WITH APPLICATION 71382, ON FILE AT THE NEVADA DIVISION OF WATER RESOURCES

POINT OF DIVERSION

THE POINT OF DIVERSION IS DERBY DAM, SITUATED WITHIN THE N ½, SW ¼, SECTION 19, T. 20 N., R. 23 E., M.D.B. & M.(UNCHANGED).

Existing Place of Use

Acerage subject to previous Change Applications

Acerage subject to retirement of water rights

SCALE
0 200 400 800 1,600 FEET
1 inch = 400 ft.

Existing Place of use

ID No.	APN No.	TCID No.	Deed No.	Section	Township	Range	Subdivision	Acre	Duty	Acre-Feet
1	20-142-02	1005-4	436805	10	20 N.	24 E.	NW ¼ SE ¼	0.24	4.5	1.080
2	21-061-09 21-061-10	1005	431393	10	20 N.	24 E.	NE ¼ SE ¼	9.60	4.5	43.200
3	21-092-23	1012-3-C	146370	12	20 N.	24 E.	NW ¼ SE ¼	0.2489	4.5	1.120
4	21-092-15	1012-3-B	239969	12	20 N.	24 E.	NW ¼ SE ¼	0.50	4.5	2.250
5	21-092-17	1012-3-H	107499	12	20 N.	24 E.	NW ¼ SE ¼	0.2489	4.5	1.120
6	21-092-17	1012-3-H	405054	12	20 N.	24 E.	NW ¼ SE ¼	0.22	4.5	0.990
7	21-092-18	1012-3-F-1	302631	12	20 N.	24 E.	NW ¼ SE ¼	0.25	4.5	1.130
8	21-132-62	1036-3-D	441324	14	20 N.	24 E.	NW ¼ SE ¼	1.41	4.5	6.345
9	21-132-63	1036-3-C	441324	14	20 N.	24 E.	NW ¼ SE ¼	1.13	4.5	5.085
10	21-132-64	1036-3-B	441324	14	20 N.	24 E.	NW ¼ SE ¼	0.28	4.5	1.260
11	21-132-64	1036-3-B	441324	14	20 N.	24 E.	SW ¼ SE ¼	1.72	4.5	7.740
12	21-272-04	1048	295273	18	20 N.	25 E.	NE ¼ NW ¼	7.80	3.5	27.300
13	21-272-08	1050	319106	18	20 N.	25 E.	NE ¼ NW ¼	2.40	3.5	8.400
14	21-272-11	1049-2-1	319109	18	20 N.	25 E.	NE ¼ NW ¼	2.86	3.5	10.010
15	21-272-11	1049-2-1	319109	18	20 N.	25 E.	NW ¼ NW ¼	0.23	3.5	0.805
16	21-272-10	1049-2-2	319107	18	20 N.	25 E.	NW ¼ NW ¼	1.28	3.5	4.480
17	21-272-09	1049-2	319108	18	20 N.	25 E.	NW ¼ NW ¼	8.60	3.5	30.1
18	21-272-09	1049-2	319108	18	20 N.	25 E.	NE ¼ NW ¼	6.53	3.5	22.855
19	21-272-05	1048-2	319110	18	20 N.	25 E.	NE ¼ NW ¼	11.99	3.5	41.965
20	21-321-07	1053	318450	19	20 N.	25 E.	NE ¼ SE ¼	9.10	4.5	40.950
21	20-354-13	1054-1-L-1	321354	19	20 N.	25 E.	NE ¼ NE ¼	0.75	4.5	3.38
22	20-354-12	1054-1-L-2	265079	19	20 N.	25 E.	NE ¼ NE ¼	0.25	4.5	1.13
23	21-311-26	1055-1-A	436806	19	20 N.	25 E.	NW ¼ NW ¼	0.50	4.5	2.25
24	21-311-35	1055-1	436806	19	20 N.	25 E.	NW ¼ NW ¼	3.93	4.5	17.685
25	21-311-23 21-311-24	1056-1-C 1056-1-G	265801 248092 248093	19	20 N.	25 E.	SW ¼ SW ¼	10.21	4.5	45.945
							Total	~~82.2780~~ 82.2778		328.5750

STANKA CONSULTING, LTD
301 WEST KING STREET
Carson City NV 89703
(775) 841-2266
Stankaconsulting@aol.com

C:\Fernley\wdparcels\change application

September 21, 2009

Sheet 1 of 2

FILED
OCT 22 2009
STATE ENGINEER'S OFFICE
2009 OCT 22 AM 9:08

MAP TO ACCOMPANY APPLICATION TO CHANGE THE PLACE OF USE AND MANNER OF USE OF A PORTION OF CLAIM #3 OF THE TRUCKEE RIVER DECREE FOR MUNICIPAL AND DOMESTIC PURPOSES BY THE CITY OF FERNLEY, NEVADA FROM THE TRUCKEE RIVER

LYON COUNTY NEVADA

79886T 78985

SECTION 13, TOWNSHIP 20 NORTH, RANGE 24 EAST, M.D.B.&M.

Existing Place of use

ID No.	APN No.	TCID No.	Deed No.	Section	Township	Range	Subdivision	Acre	Duty	Acre-Feet
26	21-101-02	1024-5-D	208599	13	20 N.	24 E.	NW ¼ NE ¼	0.47	4.5	2.120
27	20-412-29	1019-A-1	404460	13	20 N.	24 E.	SE ¼ NE ¼	0.58	4.5	2.610
28	21-101-01	1025-8	298515	13	20 N.	24 E.	NE ¼ NW ¼	0.37	4.5	1.670
29	21-103-11	1025-5-B	393127	13	20 N.	24 E.	NE ¼ NW ¼	6.59	4.5	29.660
30	21-103-11	1025-5-B	393127	13	20 N.	24 E.	SE ¼ NW ¼	1.00	4.5	4.500
31	21-121-14	1017-A	342342	13	20 N.	24 E.	SW ¼ SW ¼	2.00	4.5	9.000
32	21-121-10	1017-1-B-1	341031	13	20 N.	24 E.	SE ¼ SW ¼	0.80	4.5	3.600
33	21-121-09	1017-1-B	324476	13	20 N.	24 E.	SE ¼ SW ¼	0.50	4.5	2.250
34	20-841-03 21-121-08	1017-1	292747 313742 278853	13	20 N.	24 E.	SE ¼ SW ¼	3.30	4.5	14.850
35	21-111-02	1022	171592	13	20 N.	24 E.	NE ¼ SE ¼	2.00	4.5	9.000
36	21-111-32	1023	251167	13	20 N.	24 E.	SW ¼ SE ¼	2.40	4.5	10.800
37	21-111-36	1023-B	261082	13	20 N.	24 E.	SW ¼ SE ¼	1.70	4.5	7.650
38	21-111-35	1023-C	261081	13	20 N.	24 E.	SW ¼ SE ¼	0.32	4.5	1.440
39	21-111-35	1023-C	261081	13	20 N.	24 E.	SE ¼ SE ¼	0.37	4.5	1.670
40	21-111-21	1027-1	270788	13	20 N.	24 E.	SE ¼ SE ¼	2.00	4.5	9.000
41	21-111-21 21-111-35	1027-1	290818 302550 275769	13	20 N.	24 E.	SE ¼ SE ¼	1.70	4.5	7.650
							Total	26.1000		117.4700

Existing Place of Use

Acerage subject to previous Change Applications

Acerage subject to retirement of water rights

SCALE

0 200 400 800 1,600 FEET

1 inch = 400 ft.

C:\Fernley\wdparcels\change application

September 21, 2009 Sheet 2 of 2

STANKA CONSULTING, LTD
301 WEST KING STREET
Carson City NV 89703
(775) 841-2266
Stankaconsulting@aol.com

FILED
OCT 22 2009
STATE ENGINEER'S OFFICE
2009 OCT 22 AM 9:08

MAP TO ACCOMPANY APPLICATION TO CHANGE THE PLACE OF USE AND MANNER OF USE OF A PORTION OF CLAIM #3 OF THE TRUCKEE RIVER DECREE
FOR
MUNICIPAL AND DOMESTIC PURPOSES
BY
THE CITY OF FERNLEY, NEVADA
FROM
THE TRUCKEE RIVER

LYON COUNTY NEVADA

79886 T 78985