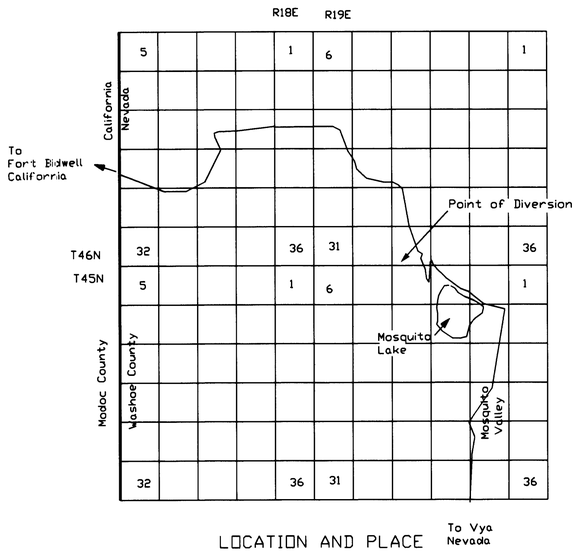

LOCATION AND PLACE
OF USE MAP

0 1 2 3 4
MILE

SCALE
1" = 2 Miles

Point of Diversion:

SW 1/4 SW 1/4 Section 33, T.46 N., R.19 E., M.D.B.&M.
At a point from which the SW corner of said Section 33 bears South 62°0.0' West, a distance of 914.3 feet.

Source:

Underground source, Washoe County, Nevada

Place of Use:

T16N, R19E, Section 33, SW1/4 SW1/4 20 acres

N

BASIS OF BEARINGS

BASIS OF BEARING: 1987 Magnetic North as shown on the U.S. Geological Survey Vya, Nevada-Oregon_ California 100,000 Scale Metric Topographic Map. Magnetic declination is 17.0 degrees.

STATE OF OREGON
COUNTY OF LAKE S.S.

I, Robert R. Squires, being duly sworn, depose and say that this map consisting of one sheet has been correctly drawn to the designated scale, from field notes of a survey made by me on June 4, 2006, and U.S. Geological Survey Topographic Maps. The map truly represents the works to divert water from an underground source in Washoe County, Nevada, for domestic and irrigation use by Valerie Gillogley. The location of the point of diversion is correctly designated hereon.

Robert R. Squires
Robert R. Squires
State Water Right Surveyor No. 796

Subcribed and sworn to before me this 8
day of June, 2006.
Stacie Geaney
Notary Public

OFFICIAL SEAL
STACIE GEANEY
NOTARY PUBLIC-OREGON
COMMISSION NO. 382244
MY COMMISSION EXPIRES AUGUST 24, 2008

REGISTERED PROFESSIONAL ENGINEER STATE OF NEVADA
ROBERT R. SQUIRES
CIVIL
No. 7003
Expires 6/30/06

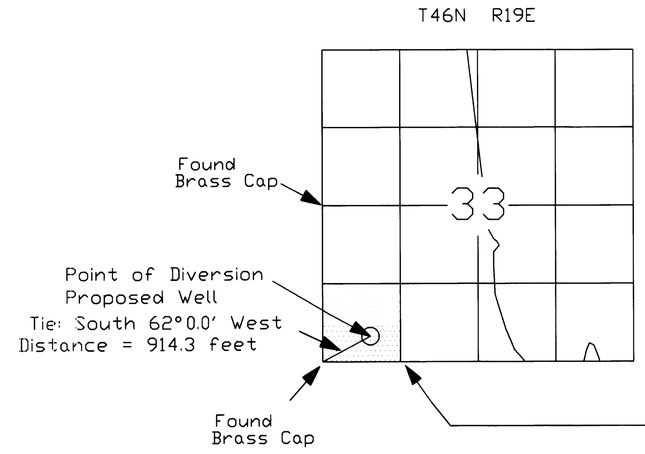

Place of Use Portion of
Property owned by Valerie Gillogley

Proposed Works: Drill well, install solar or gas pump, and distribution system.

Found Surveyor's corner monument (rebar with yellow cap) labeled RLS G205 WF PRICE

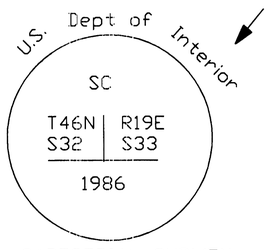

CADESTRIAL SURVEY
BUR OF LAND MANAGEMENT

0 0.5 1
1" = 1/4 MILE

74382
FILED
JUN 14 2006
STATE ENGINEER'S OFFICE

MAP TO ACCOMPANY APPLICATION TO APPROPRIATE WATER FOR DOMESTIC AND IRRIGATION USE BY VALERIE GILLOGLEY FROM AN UNDERGROUND SOURCE IN WASHOE COUNTY, NEVADA

74383