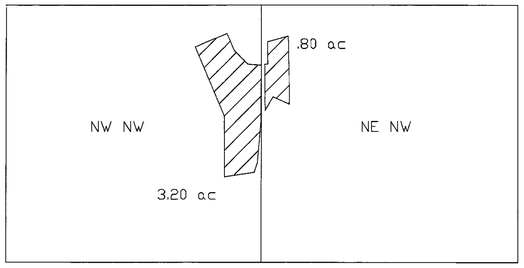

Sec. 35, T19N., R28E., M.D.B.&M.
T.C.I.D. Serial # 550-3

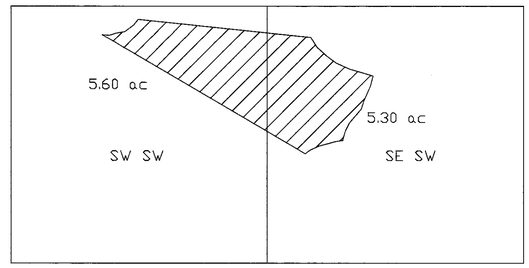

Sec. 29, T19N., R28E., M.D.B.&M.
T.C.I.D. Serial # 567-3

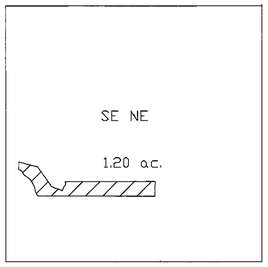

Sec. 20, T19N., R28E., M.D.B.&M.
T.C.I.D. Serial # 514

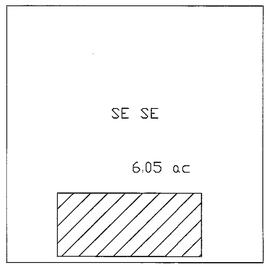

Sec. 6, T18N., R29E., M.D.B.&M.
T.C.I.D. Serial #210-3

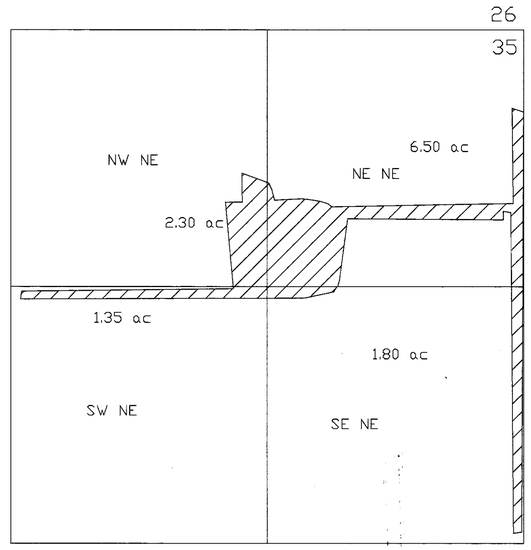

Sec. 35, T19N., R29E., M.D.B.&M.
T.C.I.D. Serial # 738-4 & 738-4-A

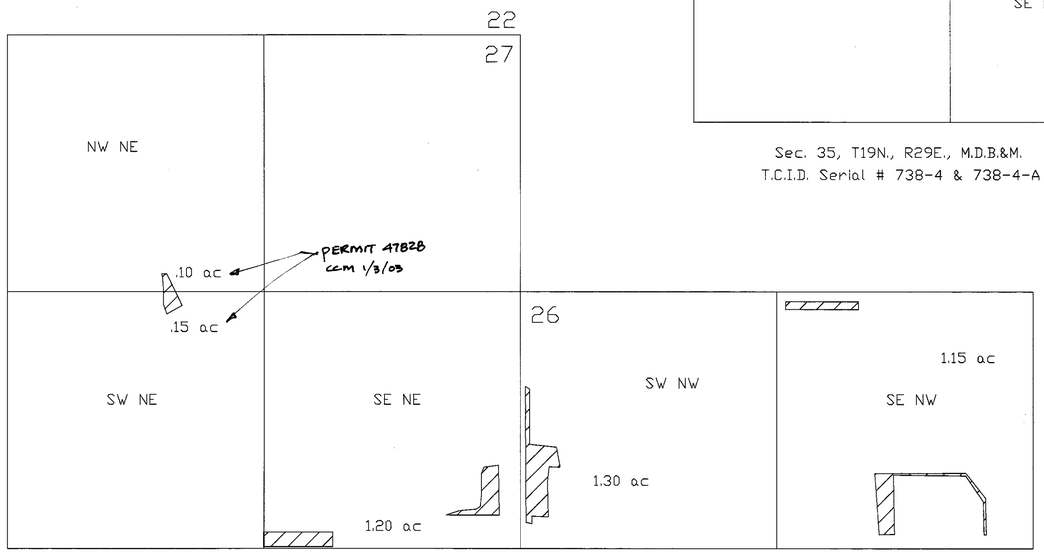

Sec. 27, T19N., R29E., M.D.B.&M.
T.C.I.D. Serial # 698 & 698-1 & 685-3-A

ACREAGE

SECTION	TOWNSHIP	RANGE	SUBDIVISION	EXISTING PLACE OF USE	PROPOSED PLACE OF USE	DUTY AC. - FT.	NOTES
20	19	28	SE NE	1.20		4.5	
29	19	28	SW SW	5.60		3.5	
29	19	28	SE SW	5.30		3.5	
35	19	28	NW NW	3.20		3.5	
35	19	28	NE NW	.80		3.5	
06	18	29	SE SE	6.05		3.5	
26	19	29	SW NW	1.30		3.5	
26	19	29	SE NW	1.15		3.5	
27	19	29	NW NE	.10		3.5	PERMIT 47828 CCM 1/3/03
27	19	29	SW NE	.15		3.5	PERMIT 47828
27	19	29	SE NE	1.20		3.5	
35	19	29	NW NE	2.30		3.5	
35	19	29	NE NE	6.50		3.5	
35	19	29	SW NE	1.35		3.5	
35	19	29	SE NE	1.80		3.5	
			TOTAL:	38.00		134.20	

STATE OF NEVADA
COUNTY OF WASHOE } SS

I, CHRIS C. MAHANNAH BEING FIRST DULY SWORN DEPOSE AND SAY THAT THIS MAP CONSISTING OF TWO SHEETS HAS BEEN CORRECTLY DRAWN TO THE DESIGNATED SCALE FROM TRUCKEE-CARSON IRRIGATION DISTRICT RECORDS THAT IT TRULY AND CORRECTLY REPRESENTS THE EXISTING PLACE OF USE AND THE PROPOSED PLACE OF USE OF WATER FROM THE TRUCKEE RIVER AND THE CARSON RIVER IN CHURCHILL COUNTY BY

HENDRIX RANCH, a Nevada General Partnership
APPLICANT

FOR IRRIGATION PURPOSES, THE POINT OF DIVERSION, LAHONTAN DAM IS UNCHANGED AND THE BOUNDARY OF ALL LANDS SHOWN BY 40 ACRE SUBDIVISIONS FOR THE AREAS PROPOSED TO BE IRRIGATED, ARE FULLY AND CORRECTLY DESIGNATED THEREON.

PROFESSIONAL ENGINEER - STATE OF NEVADA
CHRIS C. MAHANNAH
CIVIL
No. 10986

STATE WATER RIGHT SURVEYOR #976

SUBSCRIBED AND SWORN TO BEFORE ME THIS 4TH DAY OF OCTOBER 2002,
NOTARY PUBLIC IN AND FOR WASHOE COUNTY, NEVADA.

NOTARY PUBLIC

CINDY REILLY
Notary Public - State of Nevada
Appointment Recorded in Washoe County
No: 92-1995-2 - Expires January 29, 2004

69234 CERTIFICATE NO. 16919 ISSUED 11-30-07

SCALE: 1" = 400'

0' 400' 800' 1200' 1600'

N

WRD WATER RESEARCH & DEVELOPMENT, INC.
P.O. BOX 5007 * RENO, NV 89513-5007 * (775) 747-1100
ENGINEERING * HYDROLOGY * ENVIRONMENT * AGRICULTURE

LEGEND

EXISTING PLACE OF USE

PROPOSED PLACE OF USE

STATE ENGINEERS USE: 69234

FILED
JAN 03 2003
STATE ENGINEER'S OFFICE

MAP TO ACCOMPANY
APPLICATION TO CHANGE
THE PLACE OF USE
FOR IRRIGATION WATER

BY: HENDRIX RANCH, A Nevada General Partnership
FROM: TRUCKEE & CARSON RIVERS
IN CHURCHILL COUNTY, NEVADA

69234

CGM 1/9/03

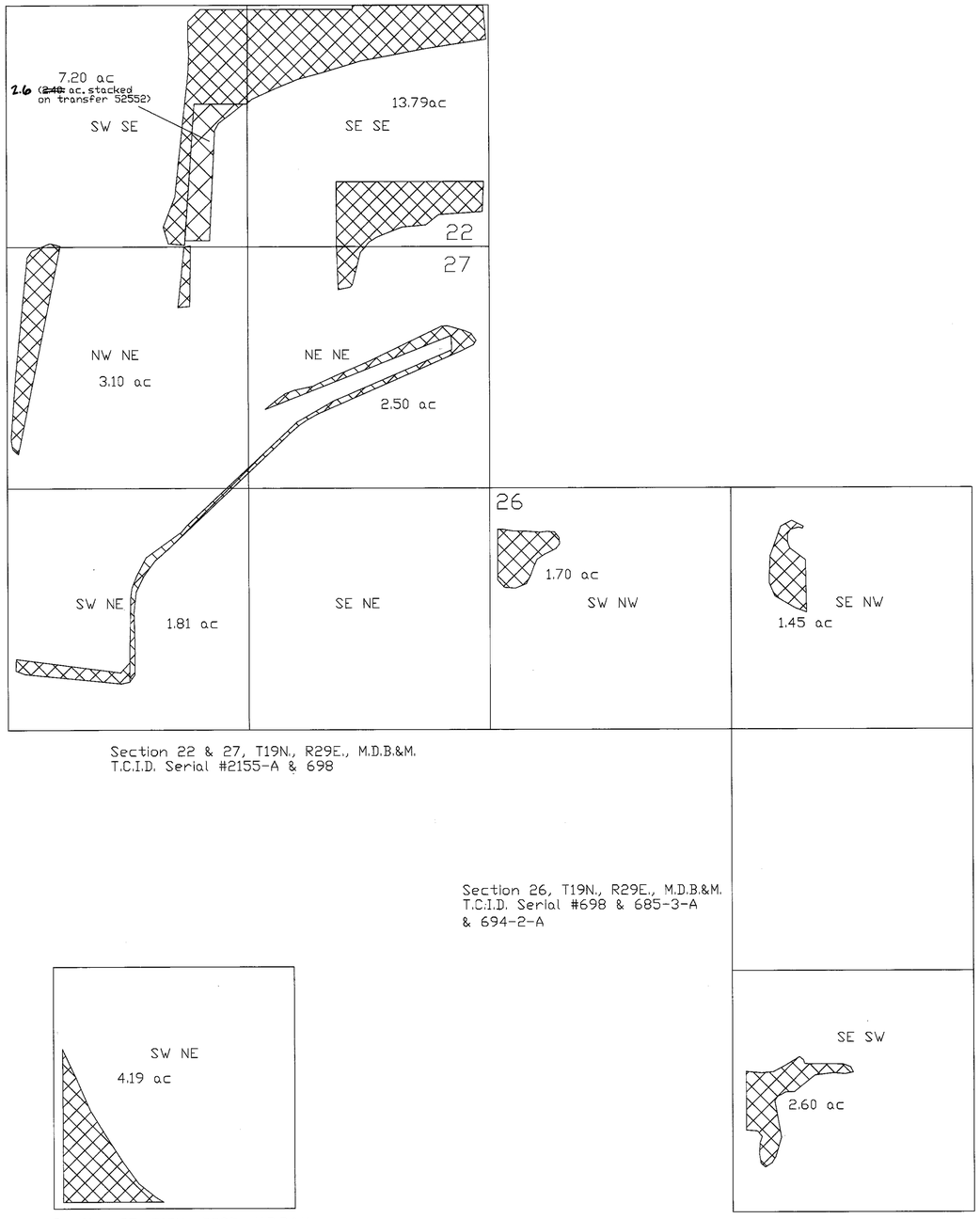

ACREAGE

SECTION	TOWNSHIP	RANGE	SUBDIVISION	EXISTING PLACE OF USE	PROPOSED PLACE OF USE	DUTY AC.-FT.	NOTES
22	19	29	SW SE		7.20	3.5	
22	19	29	SE SE		13.79	3.5	
26	19	29	SW NW		1.70	3.5	
26	19	29	SE NW		1.45	3.5	
26	19	29	SE SW		2.60	3.5	
27	19	29	NW NE		3.10	3.5	
27	19	29	NE NE		2.50	3.5	
27	19	29	SW NE		1.81	3.5	
35	19	29	SW NE		4.19	3.5	
			TOTAL:		38.34	134.20	

SCALE: 1" = 400'

0' 400' 800' 1200' 1600'

N

WRD WATER RESEARCH & DEVELOPMENT, INC.
P.O. BOX 5007 • RENO, NV 89513-5007 • (775) 747-1100
ENGINEERING • HYDROLOGY • ENVIRONMENT • AGRICULTURE

LEGEND

EXISTING PLACE OF USE

PROPOSED PLACE OF USE

STATE ENGINEERS USE: (S) 69234

FILED
JAN 0 3 2003
STATE ENGINEER'S OFFICE

RECEIVED
03 JAN -3 PM 3:11
STATE ENGINEERS OFFICE

MAP TO ACCOMPANY
APPLICATION TO CHANGE
THE PLACE OF USE
FOR IRRIGATION WATER

BY: HENDRIX RANCH,
A Nevada General Partnership

FROM: TRUCKEE & CARSON RIVERS

IN CHURCHILL COUNTY, NEVADA

69234