Existing place of use

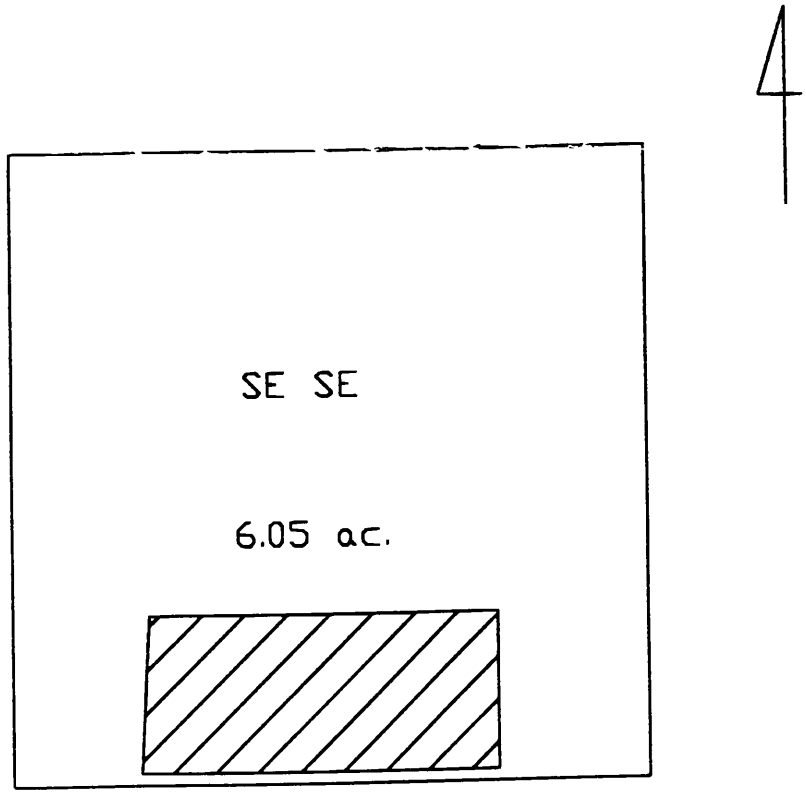

Sec. 6, T18N., R29E., M.D.B.&M.
T.C.I.D. Serial #210-3

FILED
OCT 10 2001
STATE ENGINEER'S OFFICE

68002T

Existing Place of use

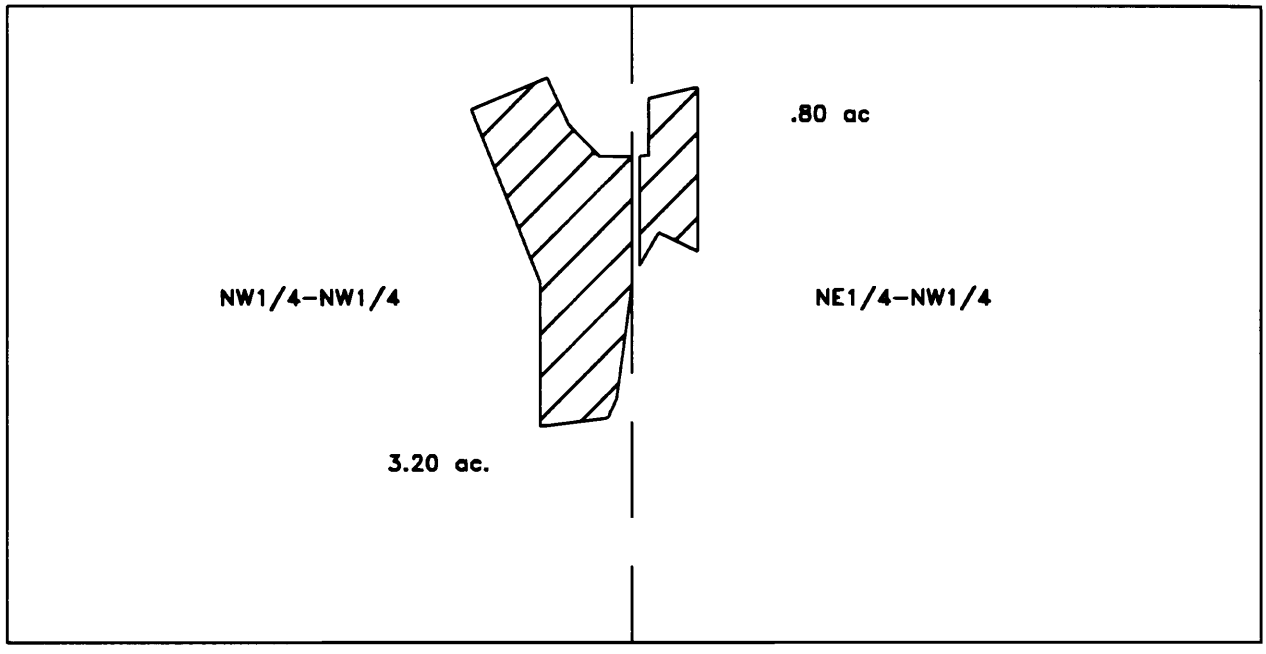

Sec. 35, T19N., R28E., M.D.B.&M.
T.C.I.D. Serial # 550-3

FILED
OCT 10 2001
STATE ENGINEER'S OFFICE

68002 T

4

Proposed place of use

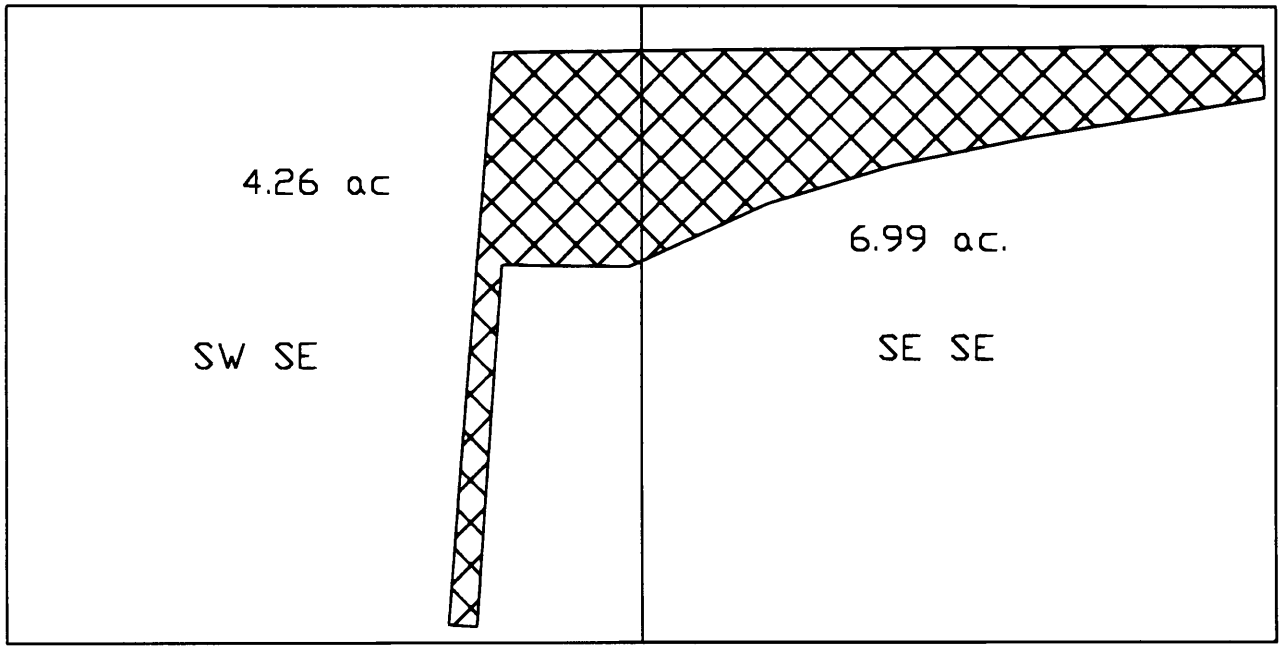

Sec. 22, T19N., R29E., M.D.B.&M.
T.C.I.D. Serial # 2155-A

FILED
OCT 10 2001
STATE ENGINEER'S OFFICE

68002T

Existing place of use

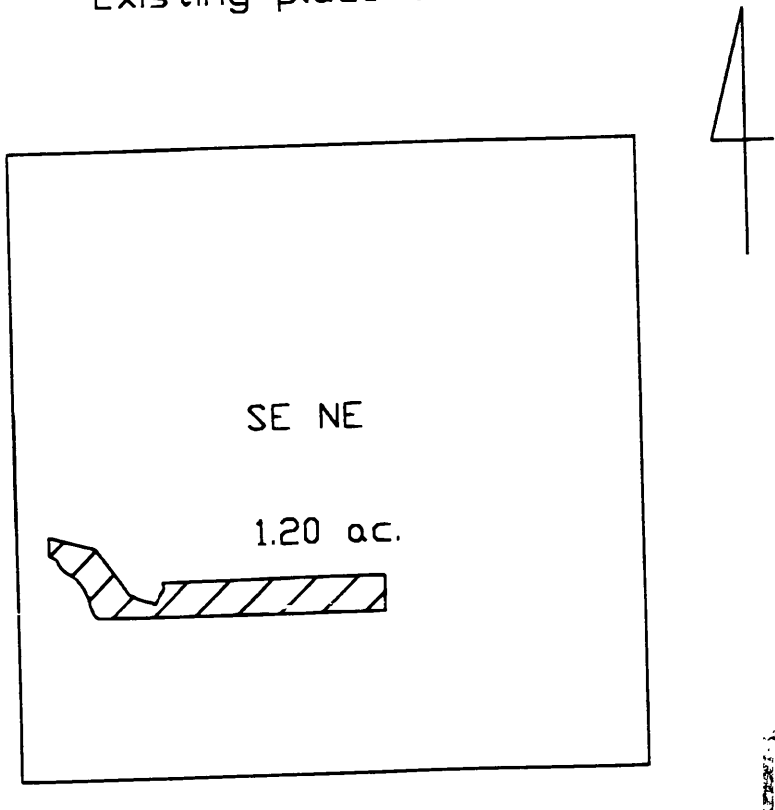

Sec. 20, T19N., R28E., M.D.B.&M.
T.C.I.D. Serial # 514

FILED
OCT 10 2001
STATE ENGINEER'S OFFICE

68002T