Proposed place of use

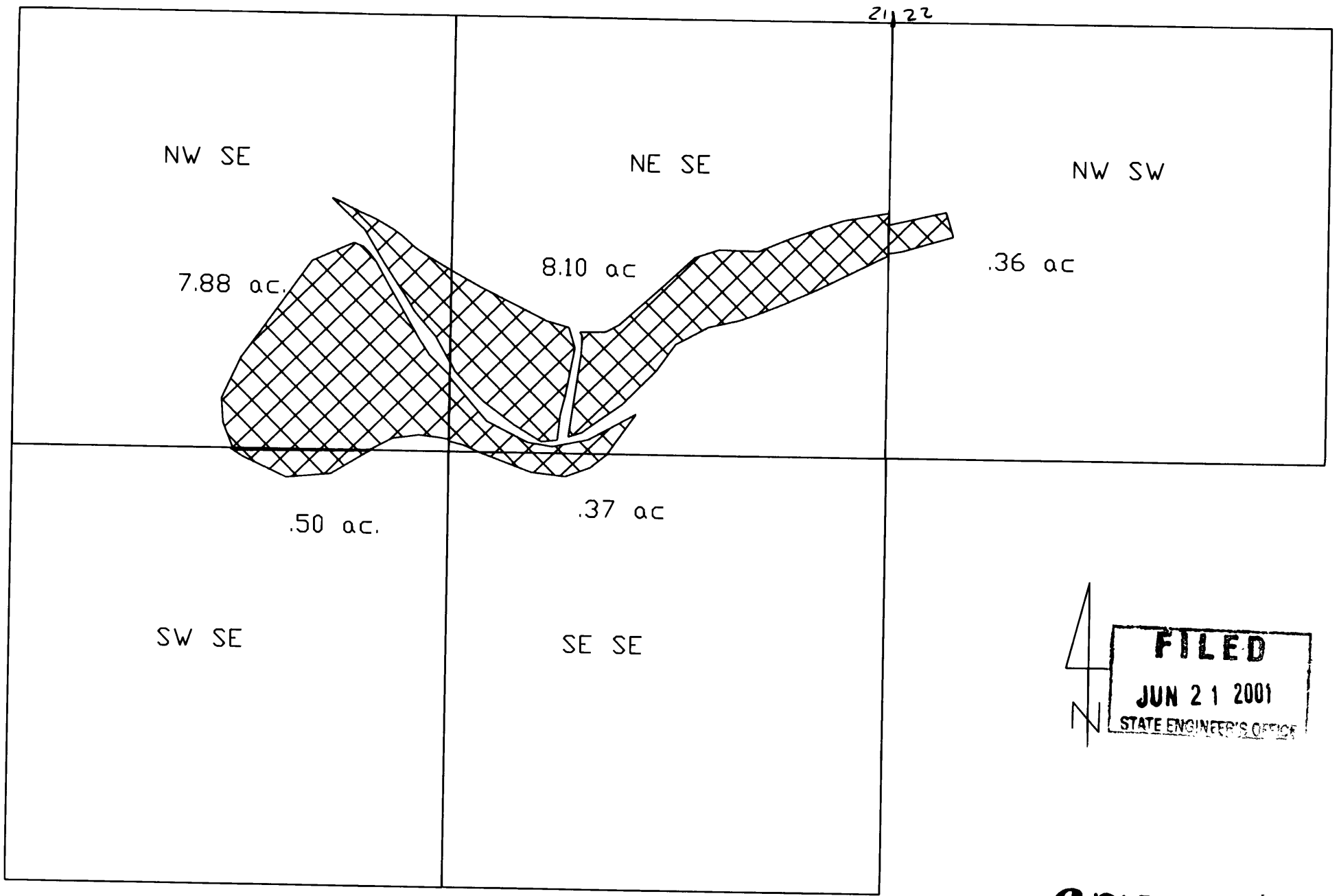

FILED
JUN 21 2001
STATE ENGINEER'S OFFICE

Section 21& 22 T19N., R27E., M.D.B.&M.
T.C.I.D. Serial #428 (4.5 a/f)

67590T

EXISTING PLACE OF USE

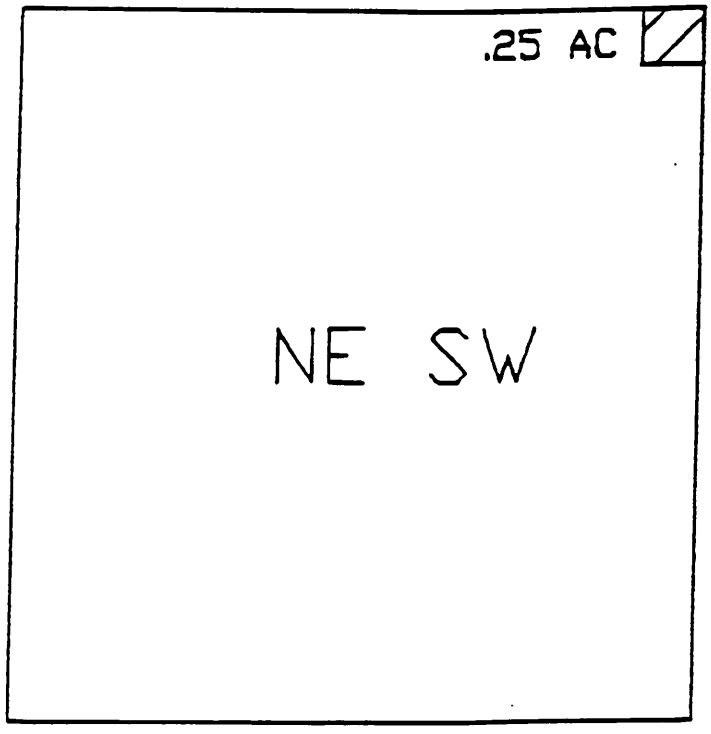

SEC. 8, T17N., R29E., M.D.B.&M.

T.C.I.D. SERIAL #34-A (ACCOUNT 5804-A [Whitaker])

FILED
JUN 21 2001
STATE ENGINEER'S OFFICE

67590 T

PROPOSED PLACE OF USE

AMENDED

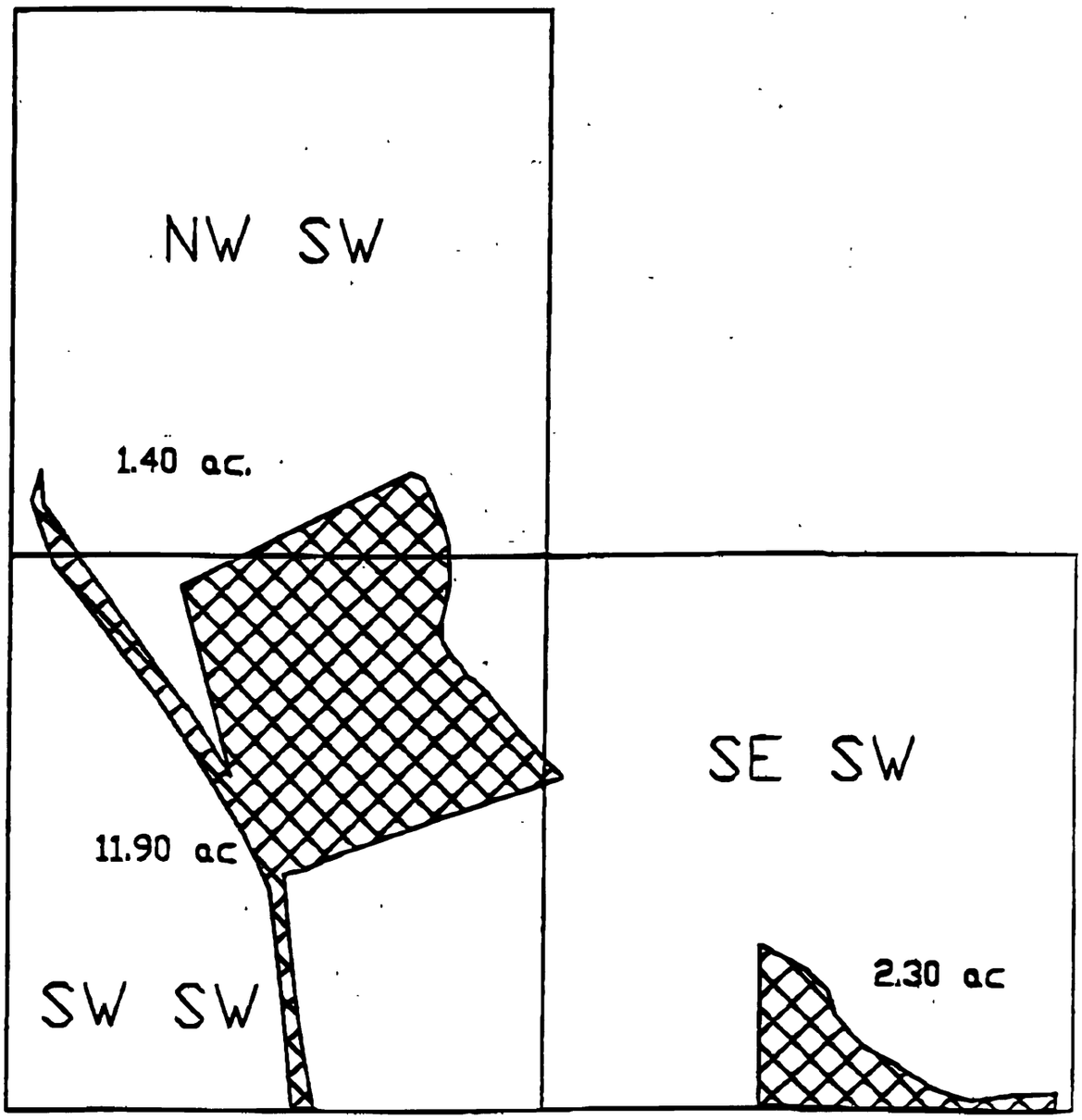

SECTION 25 T18N., R28E., M.D.B.&M.

T.C.I.D. SERIAL #6-B 15.60 AC @ 3.5

FILED
JUN 21 2001
STATE ENGINEER'S OFFICE

67590 T

PROPOSED PLACE OF USE

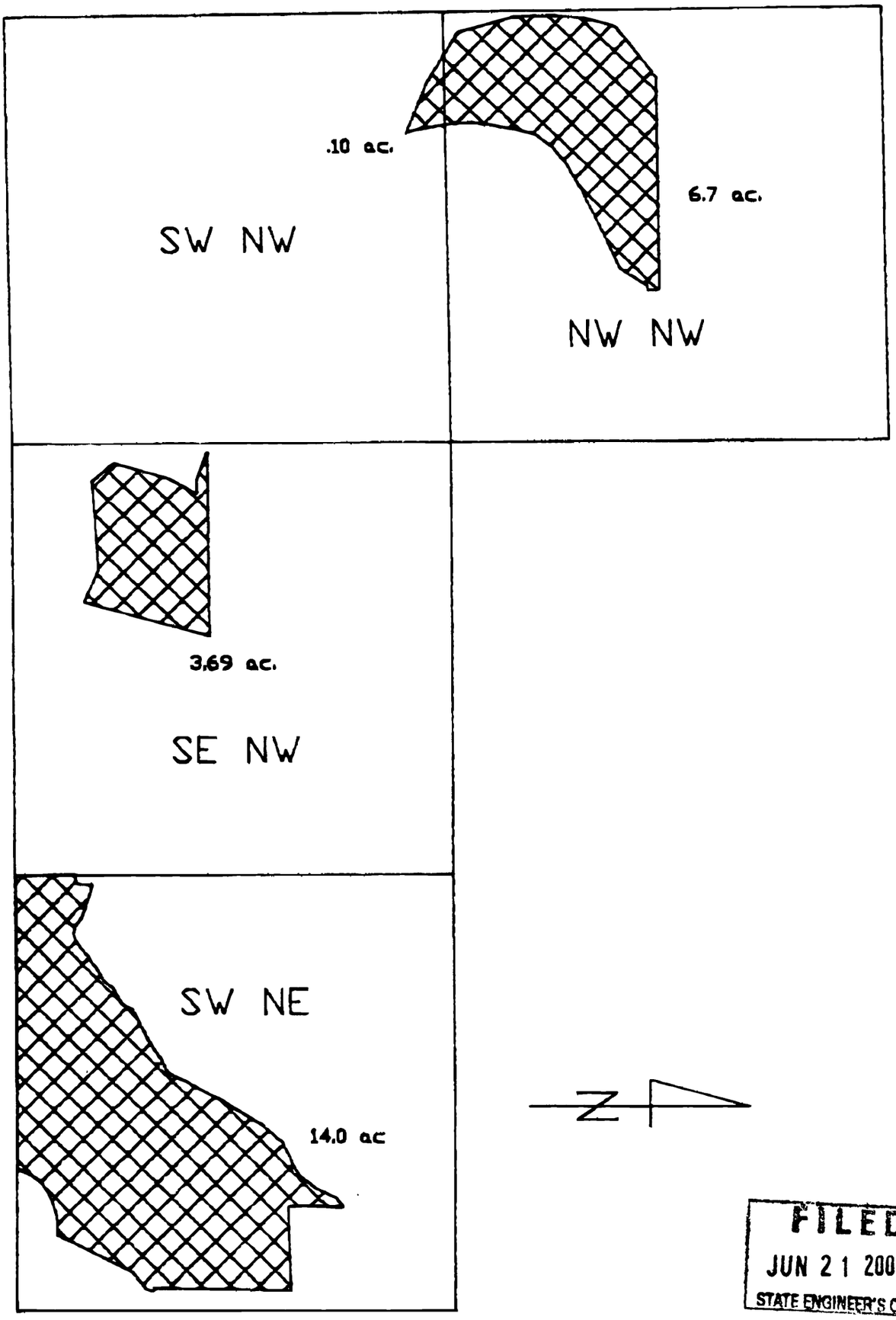

FILED
JUN 21 2001
STATE ENGINEER'S OFFICE

Sec. 27, T18N., R28E., M.D.B.&M.
T.C.I.C. Serial #169, 169-1 & 169-2 (24.49 ac. @ 3.5 a/f)

67590 T

Proposed place of use

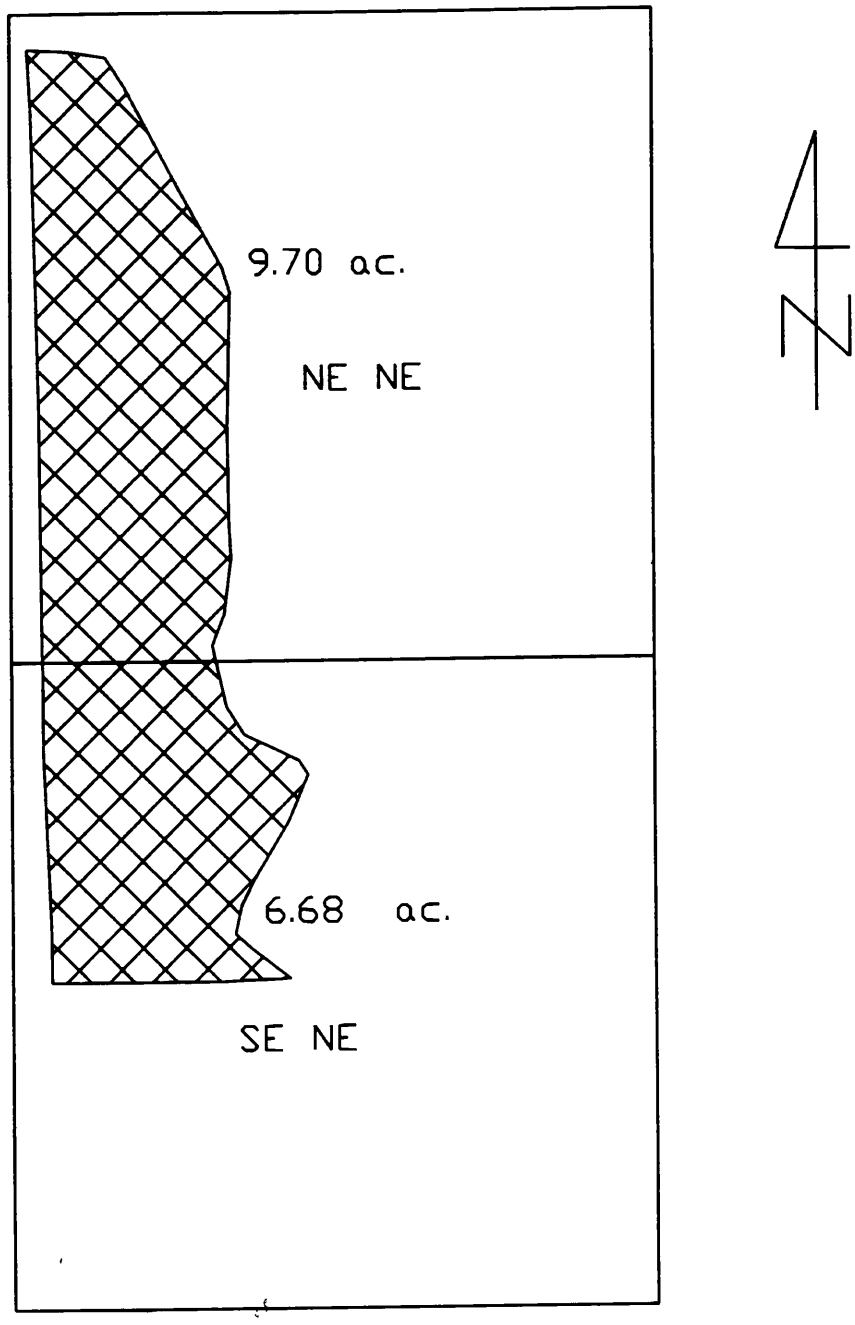

Section 12, T17N., R28E., M.D.B.&M.

T.C.I.D. Serial #8

FILED
JUN 21 2001
STATE ENGINEER'S OFFICE

67590 T

Existing place of use

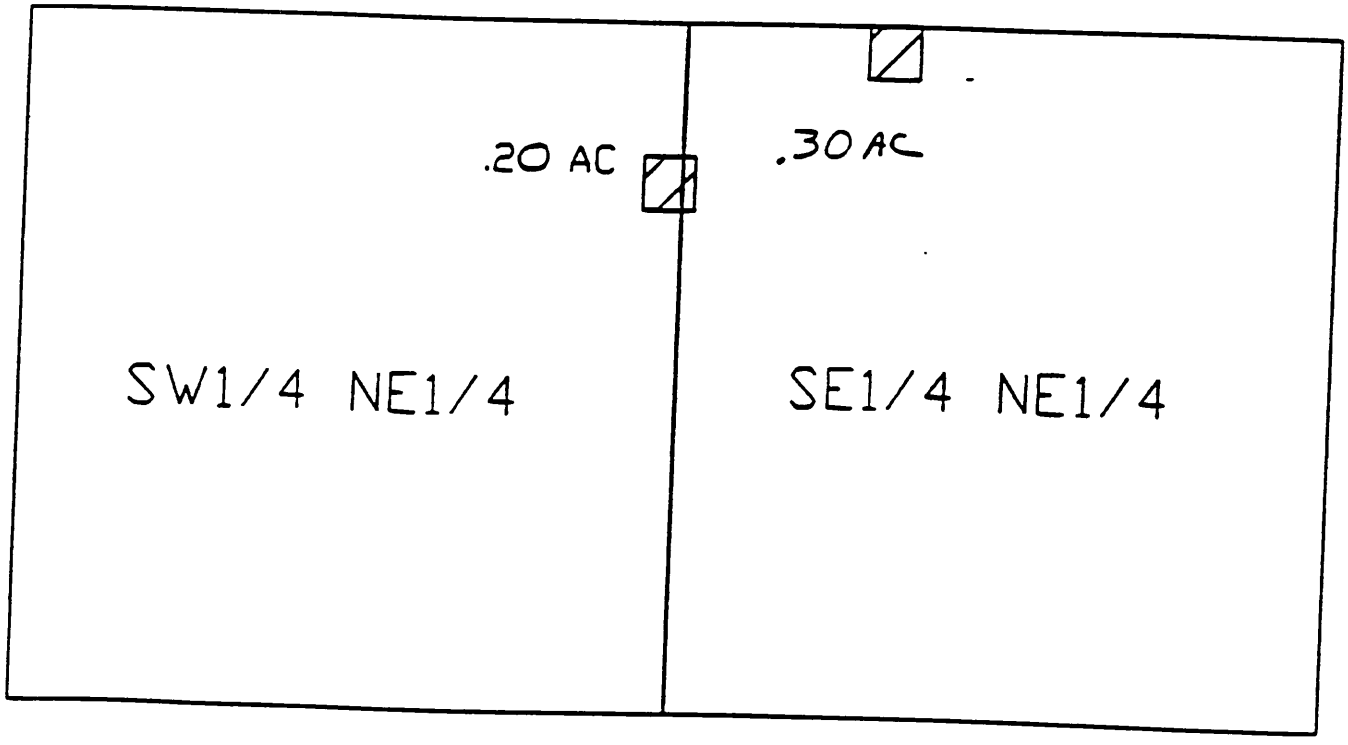

SEC. 17 T19N., R29E., M.D.B.&M.
SERIAL #640

FILED
JUN 21 2001
STATE ENGINEER'S OFFICE

67590 T

Existing place of use

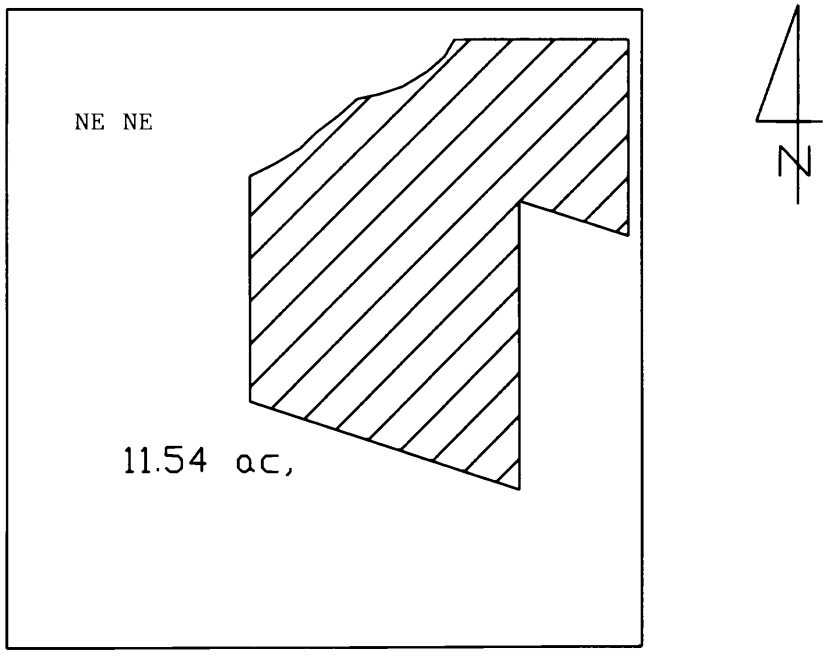

Section 28 T19N., R28E., M.D.B.&M.

Serial #556-1 & 522-1

FILED
JUN 21 2001
STATE ENGINEER'S OFFICE

67590 T

EXISTING PLACE OF USE

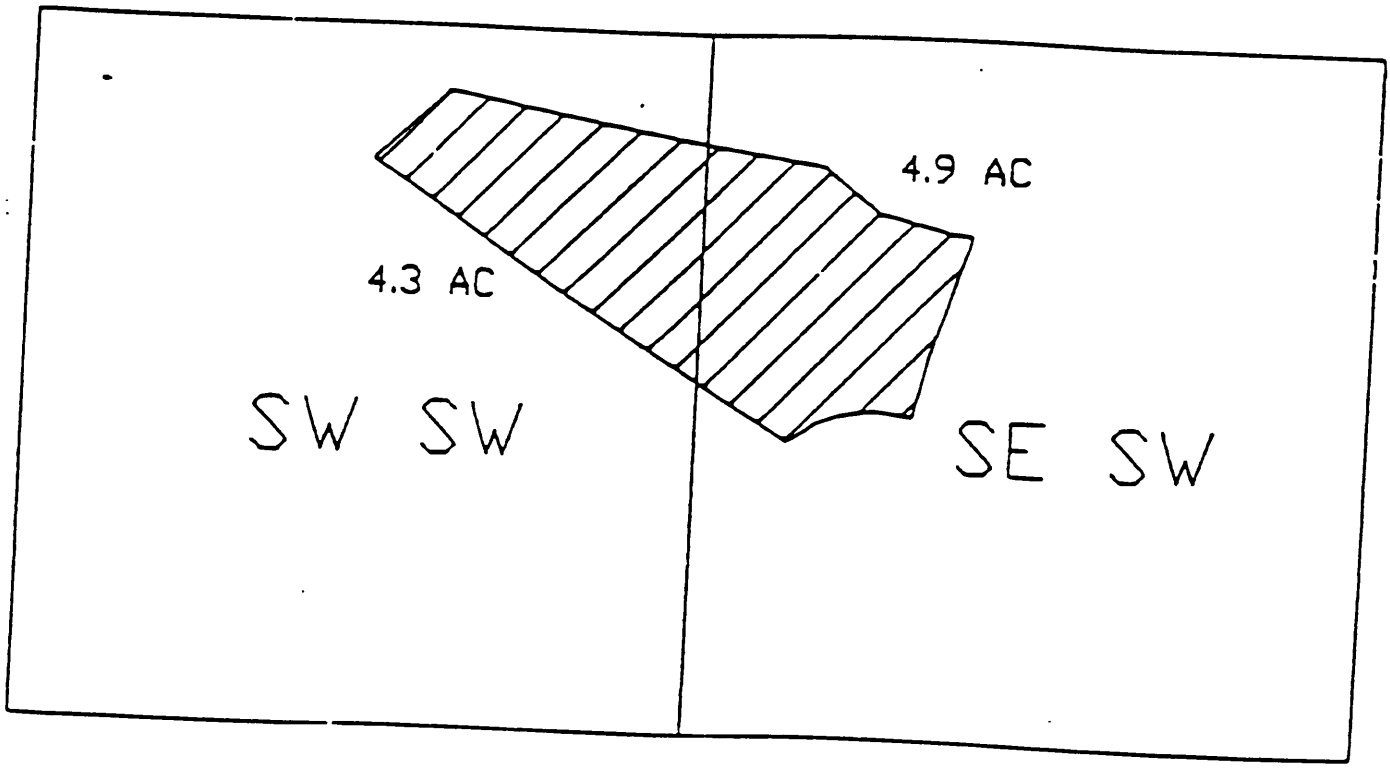

SEC 29, T19N., R28E., M.D.B.&M.

T.C.I.D. SERIAL #567-3 (ACCOUNT 5804-A [Ritter])

FILED
JUN 21 2001
STATE ENGINEER'S OFFICE

67590 T

EXISTING PLACE OF USE

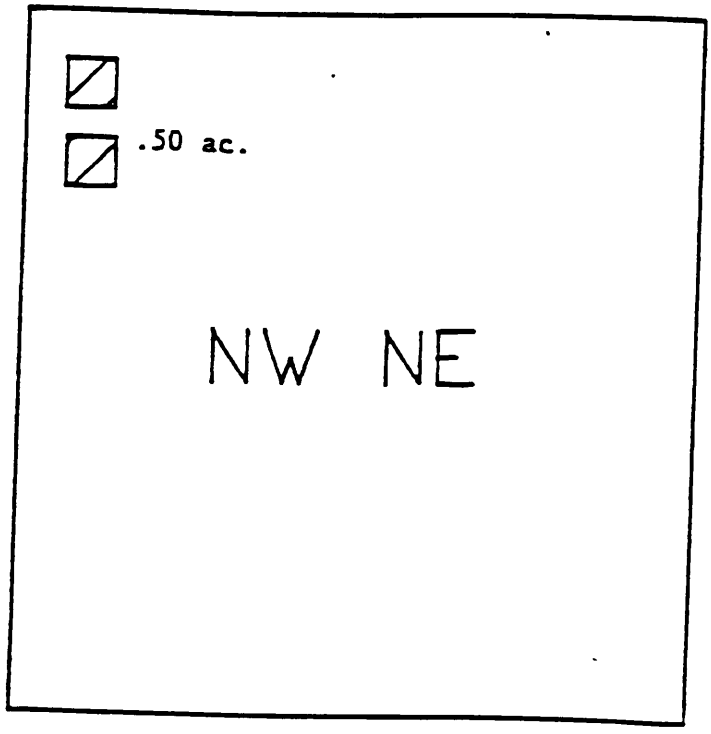

SEC. 35, T19N., R28E., M.D.B.&M
T.C.I.D. SERIAL #611-1-A + 611-1-B
(YOUNG) 5E04-A

FILED
JUN 21 2001
STATE ENGINEER'S OFFICE

67590 T

Existing place of use

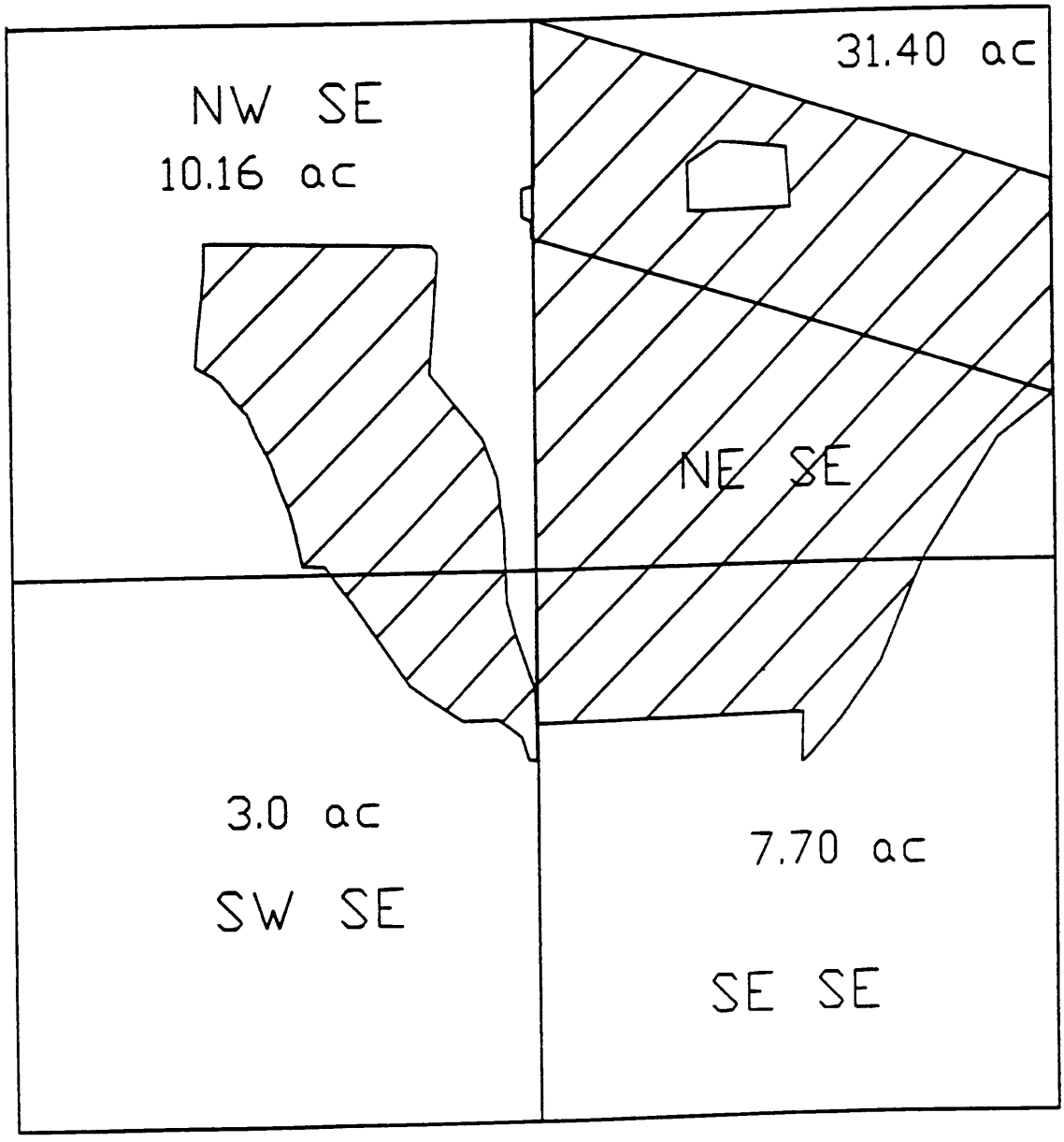

FILED
JUN 21 2001
STATE ENGINEER'S OFFICE

FILED
APR 28 2000
STATE ENGINEER'S OFFICE

Sec. 27, T19N., R28E., M.D.B.&M.
T.C.I.D. Serial #553 & 553-1 (account 5804-A)
Perry/Wallace & Christie

67590 T

EXISTING PLACE OF USE

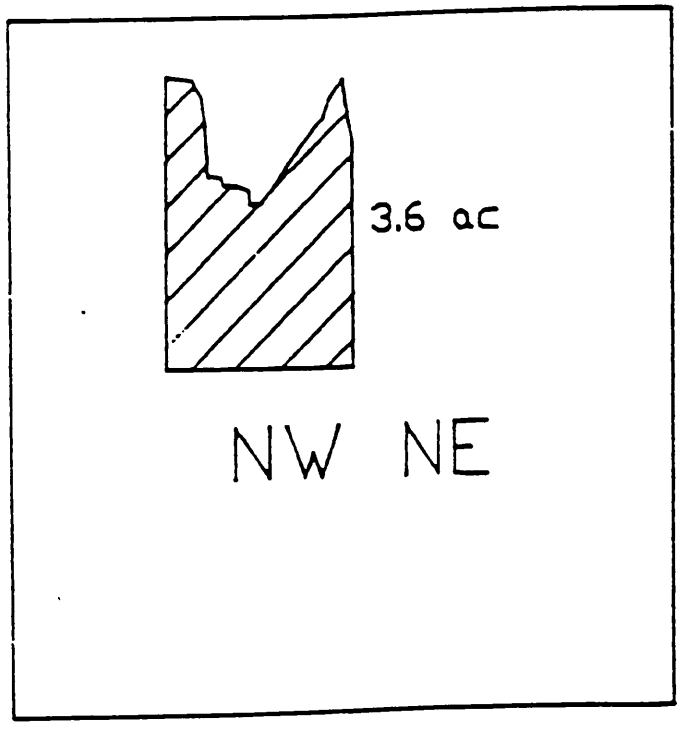

SEC. 5, T18N., R29E., M.D.B.&M.

T.C.I.D. SERIAL #200-A (ACCOUNT 5804 [T.C.I.D. ASSIGNMENTS])

FILED
JUN 21 2001
STATE ENGINEER'S OFFICE

67590 T

EXISTING PLACE OF USE

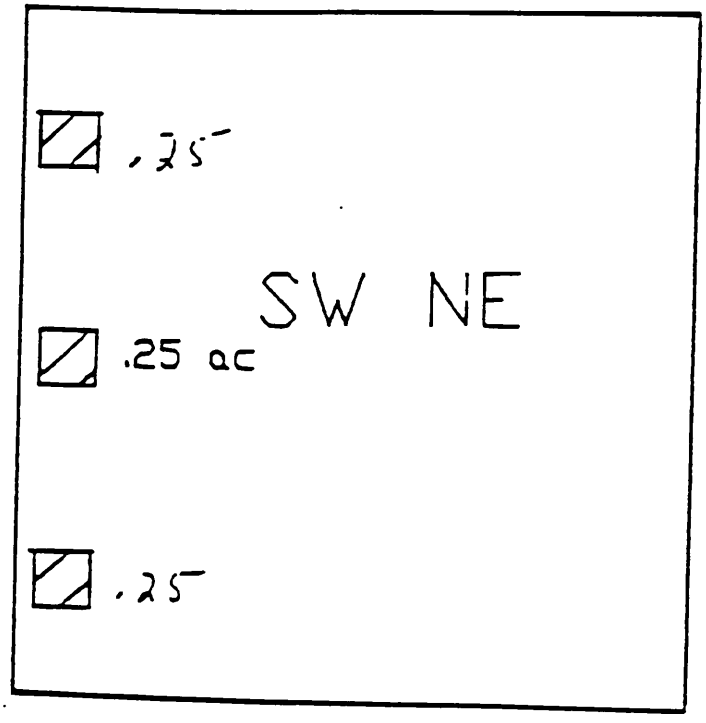

SEC. 19, T18N., R29E., M.D.B.&M.

T.C.I.D. SERIAL#282-A, 282-B & 282-C : (ACCOUNT 5804-A [Shepard])

FILED
JUN 21 2001
STATE ENGINEER'S OFFICE

67590 T