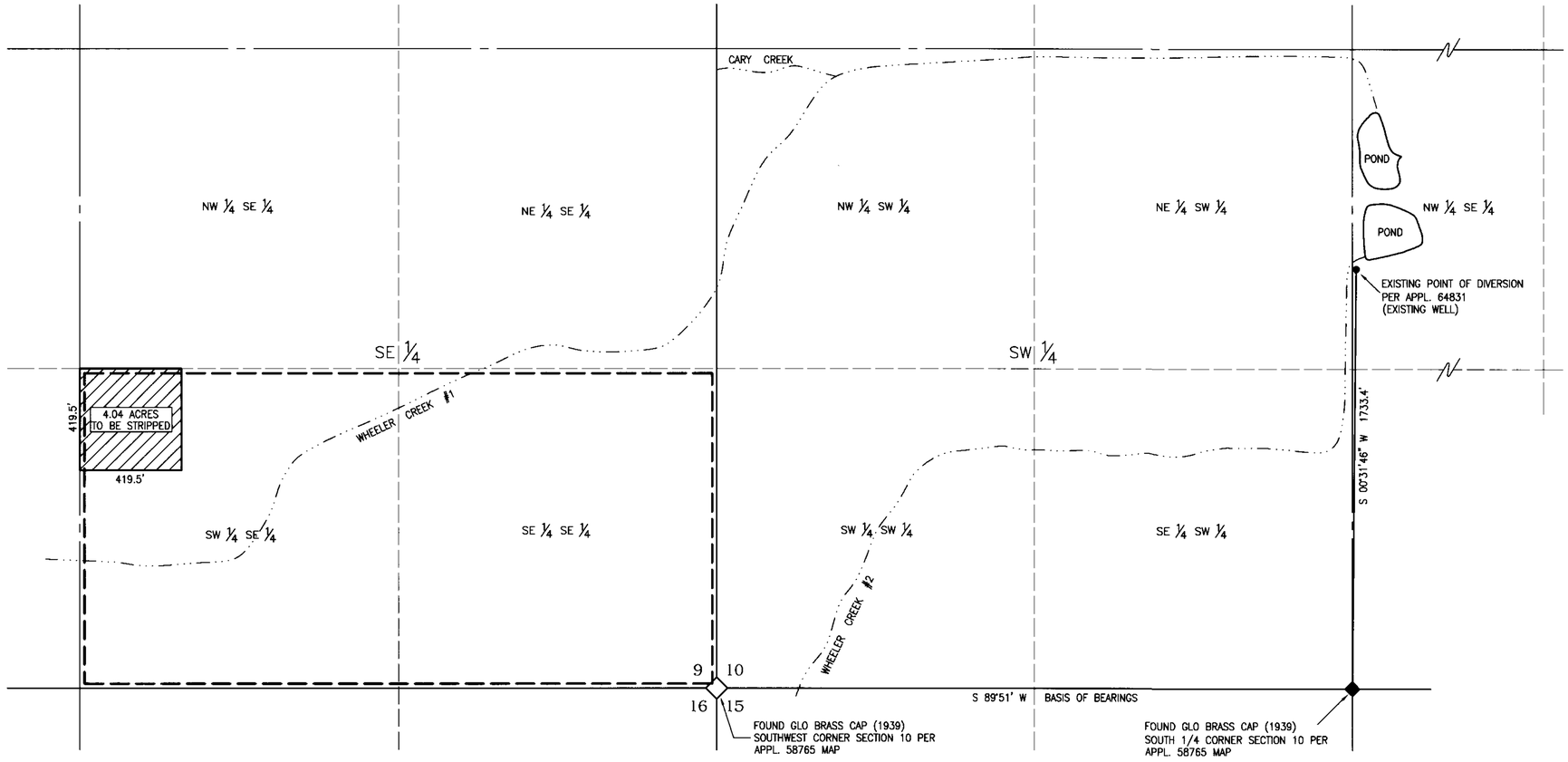

PORTIONS OF S ½ OF THE SE ¼ OF SECTION 9 AND
PORTIONS OF S ½ OF SECTION 10, T. 12 N., R. 19 E., M.D.B.& M.

SCALE: 1" = 300'

STATE OF NEVADA }
COUNTY OF CARSON } S.S.

I, DENNIS W. SMITH, BEING FIRST SWORN, DEPOSE AND SAY THAT SITE INSPECTIONS HAVE BEEN MADE BY ME, OR UNDER MY SUPERVISION AND DIRECTION, BETWEEN THE 2nd JANUARY 2002 AND THE 4th JANUARY 2002; THAT THE LOCATION OF EACH REFERENCE MONUMENT HAS BEEN VERIFIED BY SITE INSPECTION; THAT THE POINT OF DIVERSION AND PLACE OF USE SITES HAVE BEEN INSPECTED; THAT THIS MAP CONSISTING OF 1 SHEET HAS BEEN CORRECTLY DRAWN TO THE DESIGNATED SCALE FROM SURVEYING CALCULATION NOTES PREPARED BY ME, OR UNDER MY SUPERVISION AND DIRECTION, RELYING UPON ANALYSIS OF RECORDED SURVEY MAPS AND OTHER RECORDED SURVEYING DOCUMENTS IN THE OFFICE OF THE DOUGLAS COUNTY ASSESSOR AND THE NEVADA STATE ENGINEER; THAT THIS MAP TRULY AND CORRECTLY REPRESENTS THE EXISTING PLACE OF USE AND EXTENT OF THE WORKS USED TO DIVERT WATER FROM AN UNDERGROUND SOURCE IN DOUGLAS COUNTY FOR IRRIGATION AND DOMESTIC PURPOSES UNDER PERMIT 64831 AND THAT THE AREA PROPOSED TO BE WITHDRAWN FROM PERMIT 64831 FOR DOMESTIC USE IS FULLY AND CORRECTLY DESIGNATED THEREON.

PROFESSIONAL ENGINEER - STATE OF NEVADA
DENNIS W. SMITH
1/7/02
CIVIL
No. 10152

STATE WATER RIGHT SURVEYOR No. 1065
NV P.E. 10152

SUBSCRIBED AND SWORN TO BEFORE ME ON THIS 7th DAY OF January, 2002.

Wendy A. McMartin
NOTARY PUBLIC IN AND FOR Carson City COUNTY, NEVADA.

MY COMMISSION EXPIRES April 1, 2004

WENDY A. McMARTIN
NOTARY PUBLIC - NEVADA
Appt. Recorded in CARSON CITY
My Appt. Exp. April 1, 2004

LEGEND

- EXISTING PLACE OF USE
- EXISTING POINT OF DIVERSION
- FOUND SECTION CORNER
- FOUND 1/4 & 1/16 SECTION CORNER
- AREA TO BE STRIPPED OR RELINQUISHED

REFERENCE DOCUMENTS

1. MAP FILED IN SUPPORT OF APPLICATION 64831 & 58765 ON FILE IN THE OFFICE OF THE NEVADA STATE ENGINEER.

2. ASSESSOR'S PARCEL MAP 1320-27-001 ON FILE IN THE OFFICE OF THE DOUGLAS COUNTY ASSESSOR.

BASIS OF BEARING:

THE SOUTH SECTION LINE OF THE SOUTHWEST ONE-QUARTER SECTION 10, TOWNSHIP 12 NORTH, RANGE 19 EAST, M.D.M., PER THE USBLM DEPENDENT RESURVEY PLAT OF 1954 – PER MAP UNDER APPLICATION 58765 ON FILE IN THE OFFICE OF THE STATE ENGINEER.
(S 89°51' W)

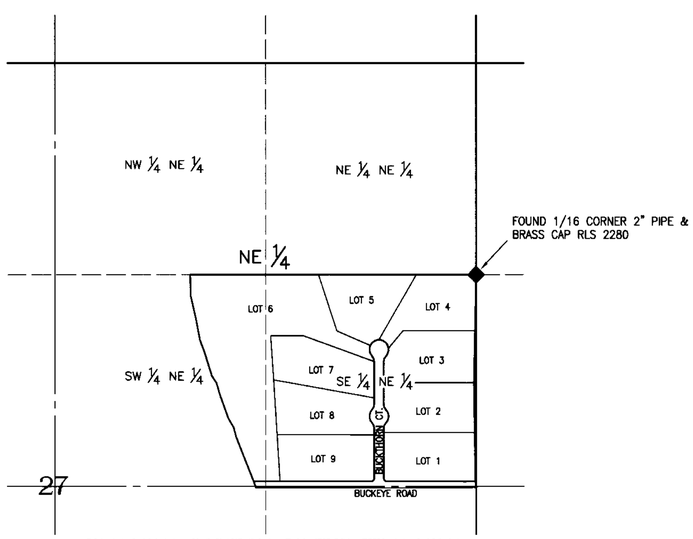

SE ¼ NE ¼, PORTION OF THE SW ¼ NE ¼
SECTION 27, T. 13 N., R. 20 E., M.D.B.& M.

4.04 ACRES (16.16 AF) TO BE RELINQUISHED FROM PERMIT 64831
AND APPLIED TO 8 LOTS WITHIN SUBDIVISION BY
GMG DEVELOPMENT, L.L.C.

SCALE: 1" = 500'

NORTH

300 150 0 300 600 900

GRAPHIC SCALE: 1" = 300'

WESTERN
ENGINEERING & SURVEYING SERVICES
3032 SILVER SAGE DRIVE
CARSON CITY NEVADA 89701
(775) 884-3200 FAX (775) 884-3211

STATE ENGINEER'S USE

FILED
JAN 09 2002
STATE ENGINEER'S OFFICE

MAP
TO ACCOMPANY RELINQUISHMENT OF A PORTION OF WATER AS APPROPRIATED UNDER PERMIT 64831 FROM EXISTING IRRIGATION AND DOMESTIC USE

BY: GMG DEVELOPMENT, L.L.C.
FROM: UNDERGROUND SOURCE IN DOUGLAS COUNTY, NEVADA

FOR PROPOSED DOMESTIC USE TO SERVE 8 LOTS UNDER FINAL SUBDIVISION MAP PD#01-018 FOR GMG DEVELOPMENT, L.L.C. IN DOUGLAS COUNTY, NEVADA

DOUGLAS COUNTY NEVADA

64831 R-01