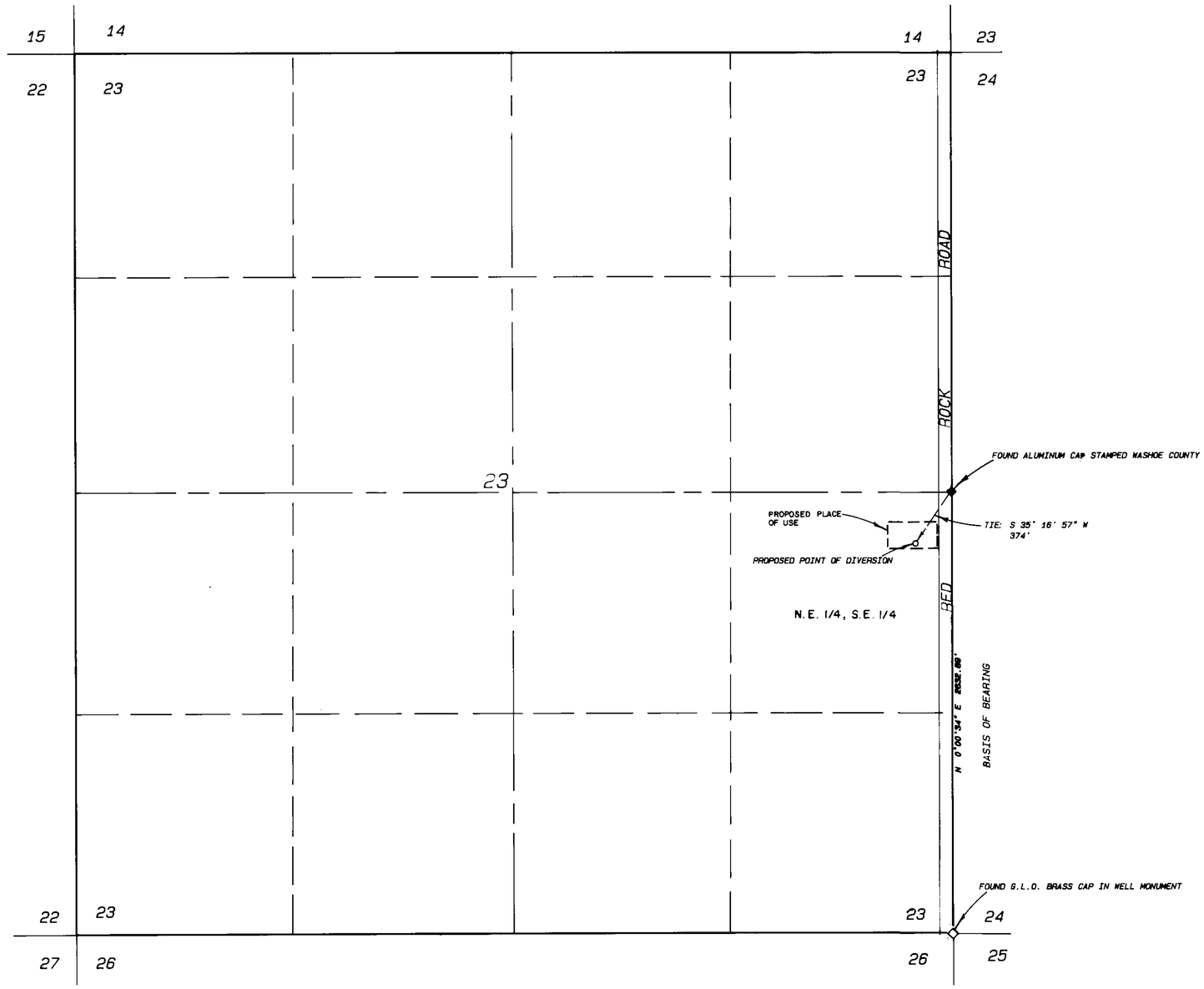

T. 21 N., R. 18 E. M.D.M.

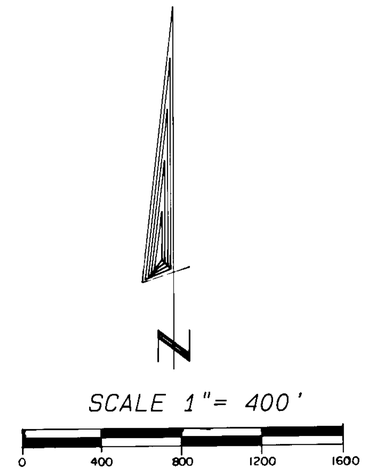

BASIS OF BEARING

SUBDIVISION MAP NUMBER 1017 WASHOE COUNTY RECORDERS OFFICE
THE EAST LINE OF THE SOUTHEAST 1/4 OF SECTION 23 TAKEN
AS N 0° 00' 34" E

STATE OF NEVADA
COUNTY OF WASHOE

I, DENNIS P. CHAPMAN, BEING FIRST DULY SWORN, DEPOSE AND SAY THAT THIS MAP, CONSISTING OF 1 SHEET, NUMBERED FROM 1 TO 1, INCLUSIVE, HAS BEEN CORRECTLY DRAWN TO THE DESIGNATED SCALE FROM FIELD NOTES OF A SURVEY MADE BY ME, BETWEEN THE 2ND DAY OF MARCH AND THE 4TH DAY OF MARCH 1997, THAT IT TRULY AND CORRECTLY REPRESENTS THE PROPOSED LOCATION AND EXTENT OF THE WORKS USED TO DIVERT WATER FROM AN UNDERGROUND SOURCE, IN WASHOE COUNTY BY TRUCKEE MEADOWS FIRE PROTECTION DISTRICT . THAT THE PROPOSED POINTS OF DIVERSION AND BOUNDARY OF ALL LANDS SHOWING 40 ACRE SUBDIVISIONS ARE FULLY AND CORRECTLY DESIGNATED THERON.

Dennis P. Chapman
DENNIS P. CHAPMAN P.L.S. No. 5506
WATER NO.

PROFESSIONAL LAND SURVEYOR
DENNIS P. CHAPMAN
No. 5506
STATE OF NEVADA

NOTARY PUBLIC
STATE OF NEVADA
County of Washoe
RONALD M. COOK
My Appointment Expires Feb 12, 2001

SUBSCRIBED AND SWORN TO ME THIS 17th DAY OF April
1997 NOTARY PUBLIC IN AND FOR WASHOE COUNTY, NEVADA.

Ronald M Cook
NOTARY PUBLIC

FILED
APR 18 1997
STATE ENGINEER'S OFFICE

MAP

TO ACCOMPANY APPLICATION TO APPROPRIATE
WATER FOR: FIRE PROTECTION AND DOMESTIC USE
BY: TRUCKEE MEADOWS FIRE PROTECTION DISTRICT.
FROM: AN UNDERGROUND SOURCE IN WASHOE COUNTY, NEVADA.

PREPARED BY: LANDMARK SURVEYING
RENO, NEVADA
324-0904

63053