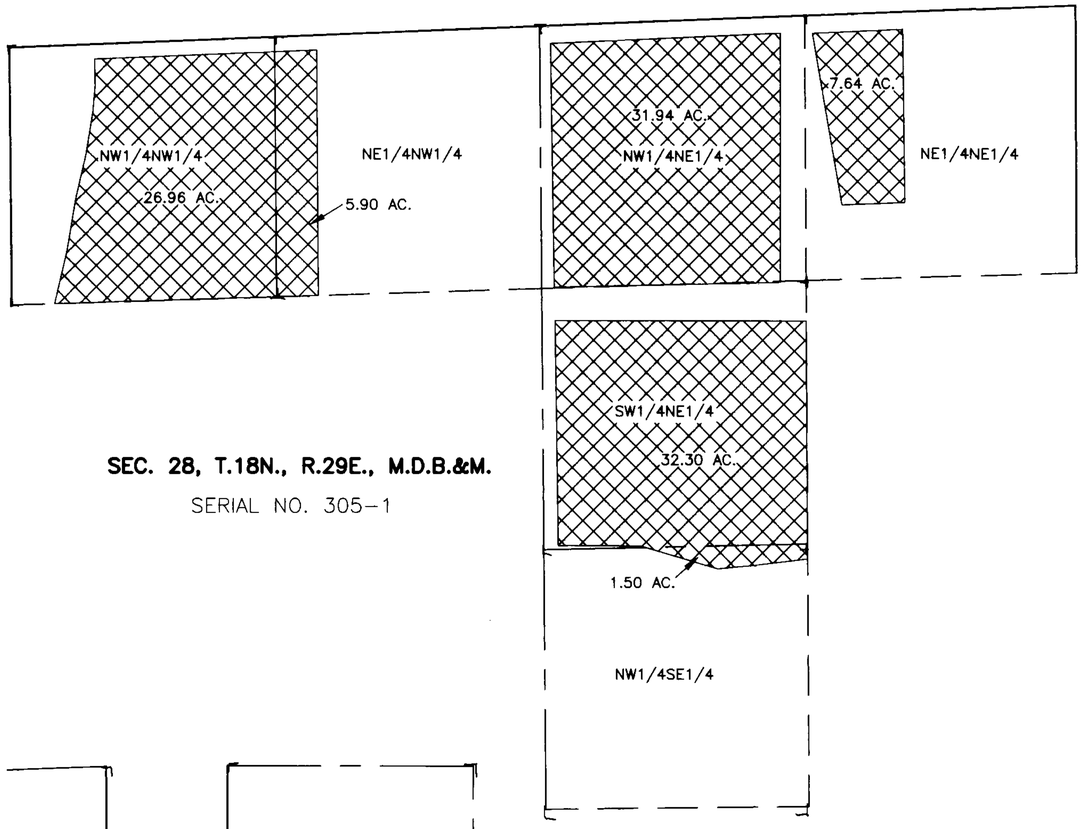

SEC. 28, T.18N., R.29E., M.D.B.&M.

SERIAL NO. 305-1

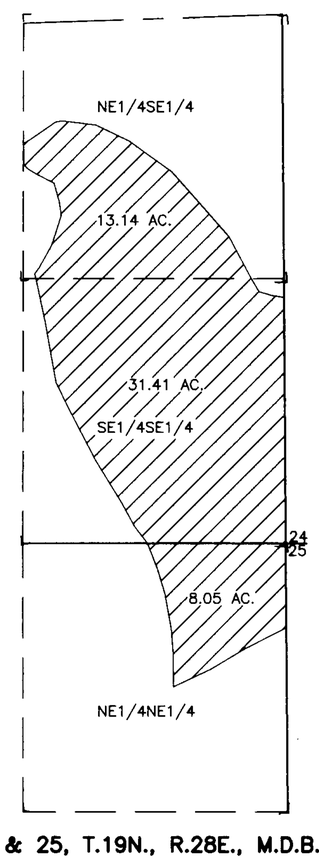

SEC. 24 & 25, T.19N., R.28E., M.D.B.&M.

SERIAL NO. 538

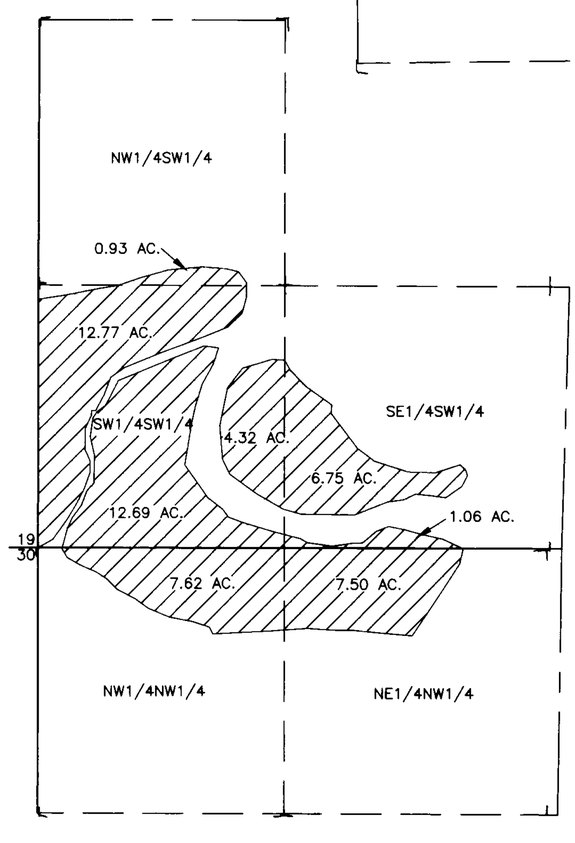

SEC. 19 & 30, T.19N., R.29E., M.D.B.&M.

SERIAL NO. 538, 538-A-1, 538-A-2 & 538-A-3

ACREAGE

SECTION	TOWNSHIP	RANGE	SUBDIVISION	EXISTING PLACE OF USE (AC)	PROPOSED PLACE OF USE (AC)	DUTY AC.-FT.
19	19N	29E	NW1/4SW1/4	0.93		3.5
19	19N	29E	SW1/4SW1/4	29.78		
19	19N	29E	SE1/4SW1/4	7.81		
30	19N	29E	NW1/4NW1/4	7.62		
30	19N	29E	NE1/4NW1/4	7.50		
24	19N	28E	NE1/4SE1/4	13.14		
24	19N	28E	SE1/4SE1/4	31.41		
25	19N	28E	NE1/4NE1/4	8.05		
28	18N	29E	NW1/4NW1/4		26.96	
28	18N	29E	NE1/4NW1/4		5.90	
28	18N	29E	NW1/4NE1/4		31.94	
28	18N	29E	SW1/4NE1/4		32.30	
28	18N	29E	NW1/4SE1/4		1.50	
28	18N	29E	NE1/4NE1/4		7.64	
			TOTAL	106.24	106.24	371.84

STATE OF NEVADA
COUNTY OF CHURCHILL } SS

I, BARRY A. FITZPATRICK, BEING FIRST DULY SWORN DEPOSE AND SAY THAT THIS MAP, CONSISTING OF ONE SHEET, HAS BEEN CORRECTLY DRAWN TO THE DESIGNATED SCALE FROM TRUCKEE-CARSON IRRIGATION DISTRICT RECORDS. THAT IT TRULY AND CORRECTLY REPRESENTS THE EXISTING PLACE OF USE AND THE PROPOSED PLACE OF USE OF WATER FROM THE TRUCKEE RIVER AND THE CARSON RIVER IN CHURCHILL COUNTY BY:

VENTURACCI & SONS
APPLICANT

FOR IRRIGATION PURPOSES, THE POINT OF DIVERSION, LAHONTON DAM IS UNCHANGED AND THE BOUNDARY OF ALL LANDS SHOWN BY 40 ACRE SUBDIVISIONS FOR THE AREAS PROPOSED TO BE IRRIGATED, ARE FULLY AND CORRECTLY DESGINATED THEREON.

Barry A. Fitzpatrick 3/31/97
STATE WATER RIGHT SURVEYOR #817 DATE

PROFESSIONAL LAND SURVEYOR STATE OF NEVADA 3/31/97 BARRY A. FITZPATRICK No. 7809

AARON B. WEST-GUILLEN
Notary Public - State of Nevada
Appointment Recorded in Churchill County
MY APPOINTMENT EXPIRES MAR. 8, 1999

SUBSCRIBED AND SWORN TO BE BEFORE ME THIS 31st DAY OF March 1997, NOTARY PUBLIC IN AND FOR CHURCHILL COUNTY, NEVADA.

Aaron B. West-Guillen 3-31-97
NOTARY PUBLIC DATE

LEGEND :

EXISTING PLACE OF USE

PROPOSED PLACE OF USE

SECTION LINES DEPICTED ON THIS MAP REFLECT FIELD LOCATIONS DETERMINED FROM AERIAL PHOTOGRAPHS BY THE U.S. BUREAU OF RECLAMATION

SECTION CORNERS PROJECTED FROM TCID WATER RIGHT MAPS

N

LUMOS AND ASSOCIATES
CIVIL ENGINEERS
SURVEYORS
MATERIALS TESTING
137 KEDDIE STREET
FALLON, NEVADA 89406
(702) 423-2188

GRAPHIC SCALE
400 0 200 400 800 1600
(IN FEET)
1 inch = 400 ft.

STATE ENGINEER'S USE 62994T

APR 01 1997

MAP
TO ACCOMPANY APPLICATION TO CHANGE THE PLACE OF USE OF A PORTION FOR IRRIGATION USE

BY : **VENTURACCI & SONS**
FROM : **TRUCKEE RIVER & CARSON RIVER**
IN CHURCHILL COUNTY, NEVADA

D:\DWG-AWG\WR\2895-636 AWG

62994 T