ACREAGE

SECTION	TOWNSHIP	RANGE	SUBDIVISION	EXISTING PLACE OF USE (AC)	PROPOSED PLACE OF USE (AC)	DUTY AC.-FT.
14	19N	30E	NW1/4NW1/4	24.82	SEE NOTE	2.99
14	19N	30E	SW1/4NW1/4	35.10		
		TOTAL		59.92		179.16

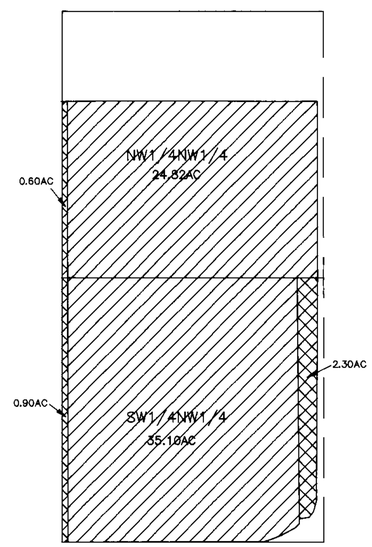

SEC. 14, T.19N., R.30E., M.D.B.&M.

SERIAL NO. 775

ASSESSOR'S PARCEL NO. 09-071-14

STATE OF NEVADA
COUNTY OF CHURCHILL } SS

I, BARRY A. FITZPATRICK, STATE UNDER OATH:

1) THAT THIS MAP, CONSISTING OF ONE SHEET, HAS BEEN CORRECTLY DRAWN TO THE DESIGNATED SCALE FROM U.S. BUREAU OF RECLAMATION RECORDS, AND OTHER RECORDS.

2) THAT IT TRULY AND CORRECTLY REPRESENTS THE EXISTING PLACE OF USE OF WATER FROM THE TRUCKEE RIVER IN STOREY COUNTY AND FROM THE CARSON RIVER IN CHURCHILL COUNTY.

3) THAT THE POINT OF DIVERSION, LAHONTON DAM, IS UNCHANGED, AND

4) THAT THE BOUNDARY OF ALL LANDS SHOWN BY 40 ACRE SUBDIVSIONS FOR THE PROPOSED PLACE OF USE FOR MAINTENANCE OF WETLANDS FOR RECREATION AND WILDLIFE/STORAGE ARE FULLY AND CORRECTLY DESIGNATED ON THIS MAP.

Barry A. Fitzpatrick — 11/1/95
STATE WATER RIGHT SURVEYOR #817 — DATE

PROFESSIONAL LAND SURVEYOR STATE OF NEVADA
11/1/95
BARRY A. FITZPATRICK
No. 7809

SUBSCRIBED AND SWORN TO BE BEFORE ME THIS 1st DAY OF November 1995, NOTARY PUBLIC IN AND FOR CHURCHILL COUNTY, NEVADA.

Kathy Robertson — 11-1-95
NOTARY PUBLIC — DATE

KATHY ROBERTSON
Notary Public - State of Nevada
Appointment Recorded in Churchill County
MY APPOINTMENT EXPIRES APR. 24, 1996

LEGEND :

WATER RIGHTS CURRENTLY DEEMED AS QUALIFYING FOR TRANSFER

WATER RIGHTS NOT CURRENTLY DEEMED AS QUALIFYING FOR TRANSFER

NOTE:
PROPOSED PLACE OF USE, STILLWATER NATIONAL WILDLIFE REFUGE (SEE PERMIT NO. 57748-77.364 ACRES +/- AS DEPICTED ON SUPPORTING MAP)

GRAPHIC SCALE
400 0 200 400 800 1600
(IN FEET)
1 inch = 400 ft.

LUMOS AND ASSOCIATES
CIVIL ENGINEERS
SURVEYORS
MATERIALS TESTING
137 KEDDIE STREET
FALLON, NEVADA 89406
(702) 423-2188

STATE ENGINEER'S USE 61668

FILED
NOV 06 1995
STATE ENGINEER'S OFFICE

MAP
TO ACCOMPANY APPLICATION TO CHANGE THE PLACE OF USE OF A PORTION & MANNER OF USE FOR RECREATION & WILDLIFE/STORAGE

BY : ARTHUR & MARJORIE WISNEFSKI

FROM : TRUCKEE RIVER & CARSON RIVER
IN CHURCHILL COUNTY, NEVADA

61668