		TOTAL		3.93	3.93	13.76

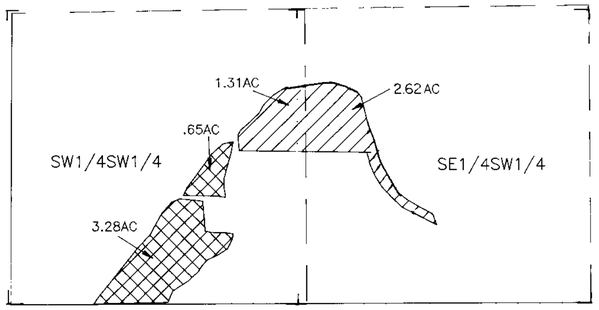

SERIAL NO. 631-A

SEC. 8, T.19N., R.29E., M.D.B.&M.

STATE OF NEVADA
COUNTY OF CHURCHILL } SS

I, BARRY A. FITZPATRICK, BEING FIRST DULY SWORN DEPOSE AND SAY THAT THIS MAP, CONSISTING OF ONE SHEET, HAS BEEN CORRECTLY DRAWN TO THE DESIGNATED SCALE FROM TRUCKEE-CARSON IRRIGATION DISTRICT RECORDS. THAT IT TRULY AND CORRECTLY REPRESENTS THE EXISTING PLACE OF USE AND THE PROPOSED PLACE OF USE OF WATER FROM THE TRUCKEE RIVER AND THE CARSON RIVER IN CHURCHILL COUNTY BY:

CRAIG LEE & SHAWNEE GILLETT
APPLICANT

FOR IRRIGATION PURPOSES, THE POINT OF DIVERSION, LAHONTON DAM IS UNCHANGED AND THE BOUNDARY OF ALL LANDS SHOWN BY 40 ACRE SUBDIVSIONS FOR THE AREAS PROPOSED TO BE IRRIGATED, ARE FULLY AND CORRECTLY DESGINATED THEREON.

Barry A. Fitzpatrick — 8/3/94
STATE WATER RIGHT SURVEYOR #817 — DATE

PROFESSIONAL LAND SURVEYOR - STATE OF NEVADA
8/3/94
BARRY A. FITZPATRICK
No. 7809

SUBSCRIBED AND SWORN TO BE BEFORE ME THIS 3rd DAY OF August 1994, NOTARY PUBLIC IN AND FOR CHURCHILL COUNTY, NEVADA.

Kathy Robertson — 8-3-94
NOTARY PUBLIC

KATHY ROBERTSON
NOTARY PUBLIC NEVADA
CHURCHILL COUNTY
My Appt. Exp. April 24 1996

LEGEND :

EXISTING PLACE OF USE

PROPOSED PLACE OF USE

SECTION LINES DEPICTED ON THIS MAP REFLECT FIELD LOCATIONS DETERMINED FROM AERIAL PHOTOGRAPHS BY THE U.S. BUREAU OF RECLAMATION

SECTION LINES PROJECTED FROM TCID WATER RIGHT MAPS

N

60381 - 16232 11/10/03

GRAPHIC SCALE
400 0 200 400 800 1600
(IN FEET)
1 inch = 400 ft.

NOTE:
THIS APPLICATION STACKS WATER RIGHTS ON A PORTION OF THE PROPOSED PLACE OF USE OF APPLICATION NO. 56336

FILED
SEP 19 1994
STATE ENGINEER'S OFFICE

LUMOS AND ASSOCIATES
CIVIL ENGINEERS
SURVEYORS
MATERIALS TESTING
137 KEDDIE STREET
FALLON, NEVADA 89406
(702) 423-2188

MAP
TO ACCOMPANY APPLICATION TO CHANGE THE PLACE OF USE FOR IRRIGATION WATER UNDER SERIAL NO. 631-A

BY : CRAIG LEE & SHAWNEE GILLETT
FROM : TRUCKEE RIVER & CARSON RIVER