MAP NO. 1 of 1

-LEGEND-
Tie Lines
Point of Diversion
Place of Use

USE TABULATION

SECTION	SUB-DIVISION	TOWNSHIP	RANGE	TYPE OF LIVESTOCK	NUMBERS LIVESTOCK	DATE OF FIRST USE
27	SENE	25N	68E	CATTLE	718	1/1967
				SHEEP	1000	1/1967

T25N, R67 & 68E, M.D.B. & M.

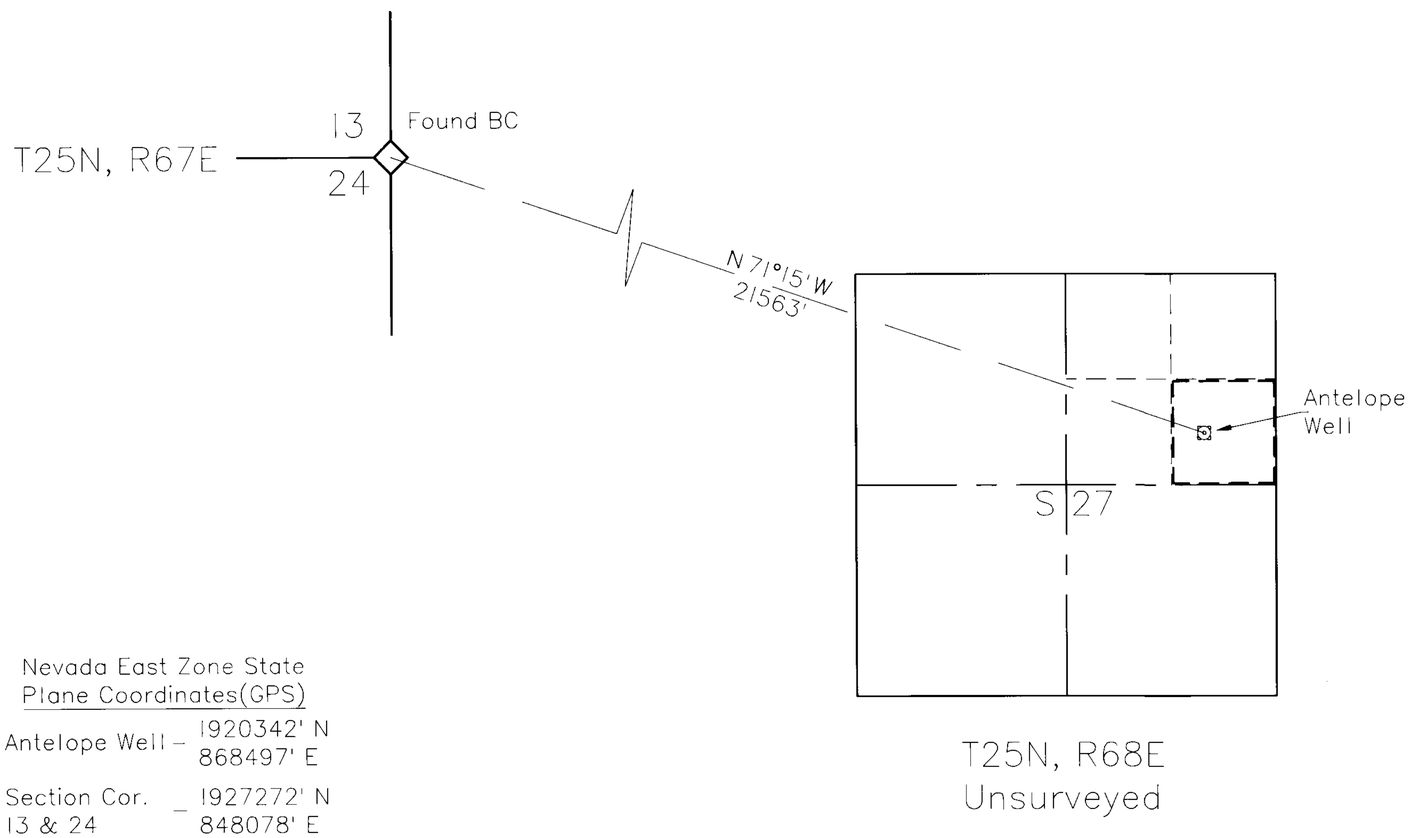

Nevada East Zone State Plane Coordinates(GPS)

Antelope Well – 1920342' N 868497' E

Section Cor. 13 & 24 – 1927272' N 848078' E

(NAD27)

STATE OF NEVADA,
COUNTY of White Pine

I, Matthew J. Wilkin
being first duly sworn, depose and say that this map has been correctly drawn to the designated scale by me, from U.S.G.S. 7.5 minute topographic quadrangles, and additional information gathered by me during September 29, 1992, That it truly and correctly represents the location and extent of waters used from: Antelope Well

by Reed B. Robison,
& UNITED STATES of AMERICA,
Bureau of Land Management,
for Livestock and Wildlife purposes; that the points of diversion, location of water channel, the place and manner of use, and the location and names of all other works or streams which are crossed by or connected with the said works, are fully and correctly designated hereon.

Matthew J. Wilkin
STATE WATER RIGHT SURVEYOR, NO 938

Subscribed and Sworn to before me Benjamin E. Cope, this 3 day of November, 1992
Notary Public in and for White Pine County, Nevada

SCALE IN FEET
0 1000 2000 3000

60141

MAP

To Accompany Application to Appropriate Water for Livestock and Wildlife, by United States of America, Bureau of Land Management, and Reed B. Robison, from Antelope Well.

Basis of Bearing:
Positions and ties are GPS derived
GPS accuracy +/- 3 to 5 meters

FILED
OCT 27 1994
STATE ENGINEER'S OFFICE

60141