ACREAGE

SECTION	TOWNSHIP	RANGE	SUBDIVISION	EXISTING ACREAGE OF USE	PROPOSED ACREAGE OF USE	DUTY AC. – FT.
35	18 N.	29 E.	SE1/4–NW1/4	28.70 AC.	SEE NOTE	
35	18 N.	29 E.	SW1/4–NE1/4	34.80 AC.	SEE NOTE	
35	18 N.	29 E.	SE1/4–NE1/4	34.60 AC.	SEE NOTE	
TOTAL				98.10	5427±	293.32

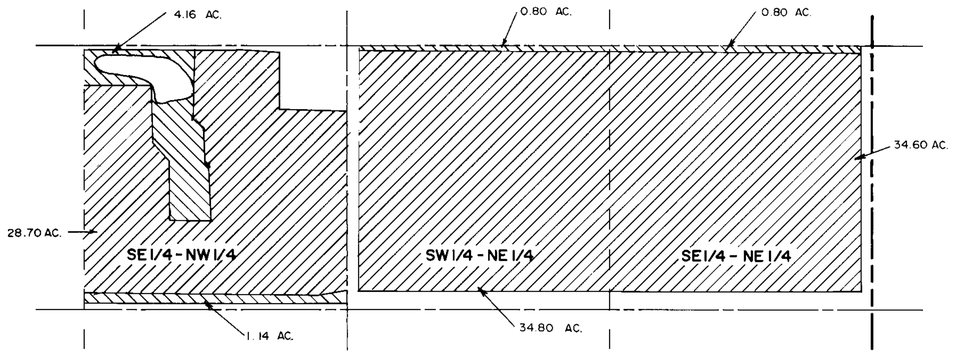

SEC. 35, T. 18 N., R. 29 E., M.D.B.&M.

T.C.I.D. SERIAL NUMBER 317

STATE OF NEVADA
COUNTY OF CHURCHILL } SS

I, BARRY A. FITZPATRICK, STATE UNDER OATH:

1) THAT THIS MAP, CONSISTING OF ONE SHEET, HAS BEEN CORRECTLY DRAWN TO THE DESIGNATED SCALE FROM U.S. BUREAU OF RECLAMATION RECORDS AND OTHER RECORDS.

2) THAT IT CORRECTLY REPRESENTS THE EXISTING PLACE OF USE OF WATER FROM THE TRUCKEE RIVER IN STOREY COUNTY AND FROM THE CARSON RIVER IN CHURCHILL COUNTY

3) THAT THE POINTS OF DIVERSION, DERBY AND LAHONTAN DAMS, ARE UNCHANGED, AND

4) THAT THE BOUNDARY OF ALL LANDS SHOWN BY 40 ACRE SUBDIVISION FOR THE PROPOSED PLACE OF USE FOR MAINTENANCE OF WETLANDS FOR RECREATION AND WILDLIFE / STORAGE ARE FULLY AND CORRECTLY DESIGNATED ON THIS MAP.

PROFESSIONAL LAND SURVEYOR — STATE OF NEVADA — 5/18/92 — No. 2419

Barry A. Fitzpatrick — 5/18/92
STATE WATER RIGHT SURVEYOR #817 — DATE

KATHY HUBEL — NOTARY PUBLIC — STATE OF NEVADA — MY APPOINTMENT EXPIRES APR 24 1995

SUBSCRIBED AND SWORN TO BE BEFORE ME THIS 18TH DAY OF May 1992, NOTARY PUBLIC IN AND FOR CHURCHILL COUNTY, NEVADA.

Kathy Hubel — 5-18-92
NOTARY PUBLIC — DATE

LEGEND :

EXISTING PLACE OF USE AND INCLUDED IN BUREAU OF RECLAMATION COMPOSITE MAP

W/R NOT ON COMPOSITE MAP

SCALE : 1" = 400'

0' 400' 800' 1200' 1600'

NOTE:
FOR PROPOSED PLACE OF USE SEE SHEET 2 of 2 UNDER STATE PERMIT #55996

5766 & 667T

FILED
MAY 13 1992
STATE ENGINEER

STATE ENGINEER
92 MAY 13 P 3:24

LUMOS & ASSOCIATES, INC.
Civil Engineers • Surveyors • Material Testing
197 Keddie Street, Fallon, NV 89406 (702) 423-2186

MAP

TO ACCOMPANY APPLICATION TO CHANGE THE PLACE OF USE AND MANNER OF USE FOR MAINTENANCE OF WETLANDS FOR RECREATION AND WILDLIFE/STORAGE

BY : THE NATURE CONSERVANCY
FROM : TRUCKEE RIVER & CARSON RIVER

5766 T 5700