ACREAGE						
SECTION	TOWNSHIP	RANGE	SUBDIVISION	EXISTING ACREAGE OF USE	PROPOSED ACREAGE OF USE	ACRE FEET TO BE TRANSFERRED
27	18 N	29 E	NW1/4-SW1/4	35.90	SEE NOTE	
"	"	"	NE1/4-SW1/4	36.40	"	
"	"	"	SW1/4-SW1/4	26.00	"	
"	"	"	SE1/4-SW1/4	27.40	"	
28	18	29	NE1/4-SE1/4	16.20	"	
"	"	"	SE1/4 SE1/4	18.00	"	
TOTAL				159.90	56720±	478.10

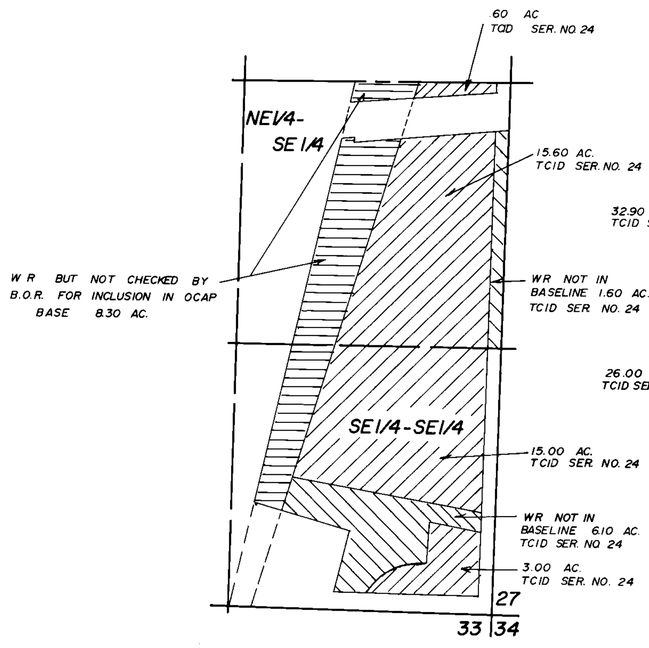

SEC. 28, T. 18 N, R. 29E., M.D.B. & M.

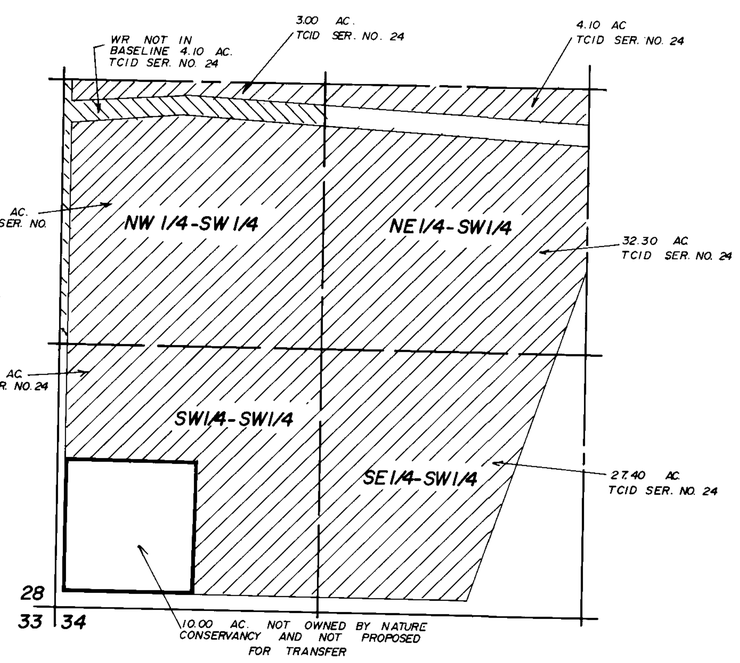

SEC. 27, T. 18N., R. 29E, M.D.B. & M.

NOTE

FOR PROPOSED PLACE OF USE
SEE PERMIT NO. 53860

STATE OF NEVADA
COUNTY OF CHURCHILL } SS

I, BARRY A. FITZPATRICK, STATE UNDER OATH:

1) THAT THIS MAP, CONSISTING OF ONE SHEET, HAS BEEN CORRECTLY DRAWN TO THE DESIGNATED SCALE FROM U.S. BUREAU OF RECLAMATION RECORDS.

2) THAT IT CORRECTLY REPRESENTS THE EXISTING PLACE OF USE OF WATER FROM THE TRUCKEE RIVER IN STOREY COUNTY AND FROM THE CARSON RIVER IN CHURCHILL COUNTY BY THE NATURE CONSERVANCY.

3) THAT THE POINTS OF DIVERSION, DERBY AND LAHONTAN DAMS, ARE UNCHANGED, AND

4) THAT THE BOUNDARY OF ALL LANDS SHOWN BY 40 ACRE SUBDIVISION FOR THE PROPOSED PLACE OF USE FOR MAINTENANCE OF WETLANDS FOR RECREATION AND WILDLIFE / STORAGE ARE FULLY AND CORRECTLY DESIGNATED ON THIS MAP.

Barry A. Fitzpatrick — 10-2-90
STATE WATER RIGHT SURVEYOR #817 — DATE

SUBSCRIBED AND SWORN TO BE BEFORE ME THIS 4th DAY OF OCTOBER 1990, NOTARY PUBLIC IN AND FOR CHURCHILL COUNTY, NEVADA.

Sheldon D. Quinn — 4-05-90
NOTARY PUBLIC — DATE

SHELDON D. QUINN
NOTARY PUBLIC - NEVADA
CHURCHILL COUNTY
My Appt. Expires July 25, 1992

LEGEND :

EXISTING PLACE OF USE AND INCLUDED IN THE 1987 OCAP BASELINE

W/R NOT IN BASELINE

SCALE : 1" = 400'

0' 400' 800' 1200' 1600'

N

55352T

FILED
OCT 08 1990
STATE ENGINEER'S OFFICE

STATE ENGINEER'S OFFICE
90 OCT -8 AM 1:59

& ASSOCIATES, INC.

MAP

TO ACCOMPANY APPLICATION TO CHANGE THE PLACE OF USE AND MANNER OF USE FOR MAINTENANCE OF WETLANDS FOR RECREATION AND WILDLIFE/STORAGE

BY : **THE NATURE CONSERVANCY**
FROM : **TRUCKEE RIVER & CARSON RIVER**

55352T