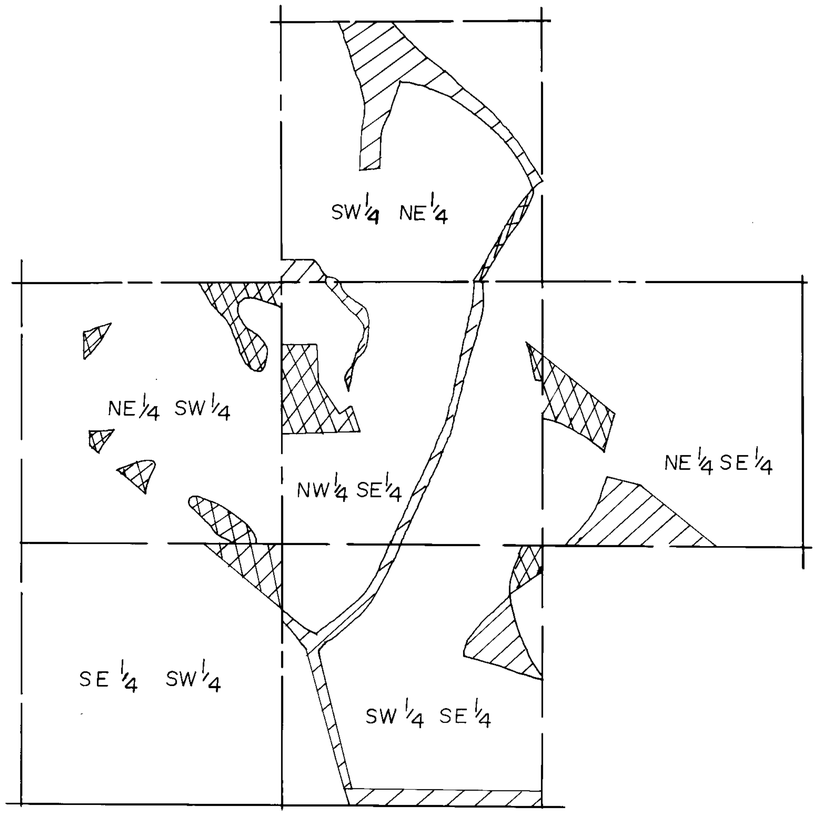

SEC. 23, T. 18 N., R. 28 E., M.D.B.& M.
SER. #154 & #156

ACREAGE						
SECTION	TOWNSHIP	RANGE	SUBDIVISION	EXISTING ACREAGE OF USE	PROPOSED ACREAGE OF USE	DUTY AC.-FT.
23	18 N	28 E	SW¼-NE¼	4.40	.40	3.5
			NE¼-SW¼		4.20	
			NW¼-SE¼	2.00	2.70	
			NE¼-SE¼	3.60	2.10	
			SE¼-SW¼		1.75	
			SW¼-SE¼	5.25	.70	
24	18 N	28 E	SE¼-SE¼	4.45	4.95	
25	18 N	28 E	NW¼-NE¼	1.80	.90	
			NE¼-NE¼	.80	4.60	
				22.30	22.30	78.05

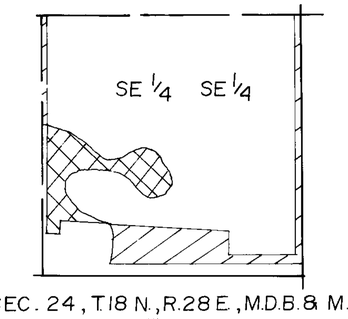

SEC. 24, T. 18 N., R. 28 E., M.D.B.& M.
SER. #160

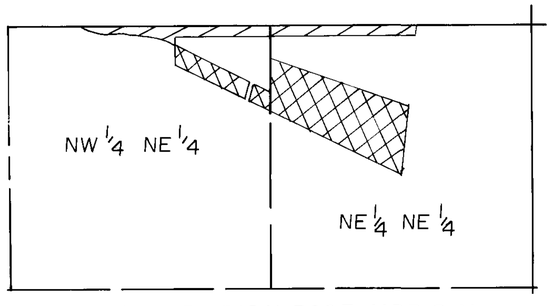

SEC. 25, T. 18 N., R. 28 E., M.D.B.& M.
SER. #160

STATE OF NEVADA
COUNTY OF CHURCHILL } SS

I, BARRY A. FITZPATRICK BEING FIRST DULY SWORN DEPOSE AND SAY THAT THIS MAP CONSISTING OF ONE SHEET HAS BEEN CORRECTLY DRAWN TO THE DESIGNATED SCALE FROM TRUCKEE-CARSON IRRIGATION DISTRICT RECORDS THAT IT TRULY AND CORRECTLY REPRESENTS THE EXISTING PLACE OF USE AND THE PROPOSED PLACE OF USE OF WATER FROM THE TRUCKEE RIVER AND THE CARSON RIVER IN CHURCHILL COUNTY BY

KENT & CARMAE WHITAKER
APPLICANT

FOR IRRIGATION PURPOSES, THE POINT OF DIVERSION, LAHONTON DAM IS UNCHANGED AND THE BOUNDARY OF ALL LANDS SHOWN BY 40 ACRE SUBDIVISIONS FOR THE AREAS PROPOSED TO BE IRRIGATED, ARE FULLY AND CORRECTLY DESIGNATED THEREON.

Barry A. Fitzpatrick
STATE WATER RIGHT SURVEYOR 817

SUBSCRIBED AND SWORN TO BE BEFORE ME THIS 23rd DAY OF September 198[illegible], NOTARY PUBLIC IN AND FOR CHURCHILL COUNTY, NEVADA.

Sheldon D. Quinn
NOTARY PUBLIC

SHELDON D. QUINN
NOTARY PUBLIC - NEVADA
CHURCHILL COUNTY
My Appt. Expires July 25, 1992

I, THE UNDERSIGNED OWNER OF THE PROPOSED PLACE OF USE, DO HEREBY CERTIFY THAT I HAVE REVIEWED AND EXAMINED THIS WATER RIGHT TRANSFER MAP AND DO HEREBY CERTIFY IT TO BE CORRECT.

Kent Whitaker
PROPERTY OWNER

4-[illegible]-[illegible]
DATE

LEGEND

EXISTING PLACE OF USE

PROPOSED PLACE OF USE

SCALE: 1" = 400'

0' 400' 800' 1200' 1600'

N

FILED
SEP 23 1988
STATE ENGINEER'S OFFICE

LUMOS & ASSOCIATES, INC.
Civil Engineers · Surveyors · Materials Testing
625 Fairview Dr., Ste. 102, Carson City, Nv., 89701
(702) 883-7077
590 W. Williams Ave., Fallon, Nv., 89406
(702) 423-2188

Client No. 1296-117

MAP TO ACCOMPANY APPLICATION TO CHANGE THE PLACE OF USE FOR IRRIGATION WATER

BY KENT & CARMAE WHITAKER

FROM TRUCKEE RIVER & CARSON RIVER

52554