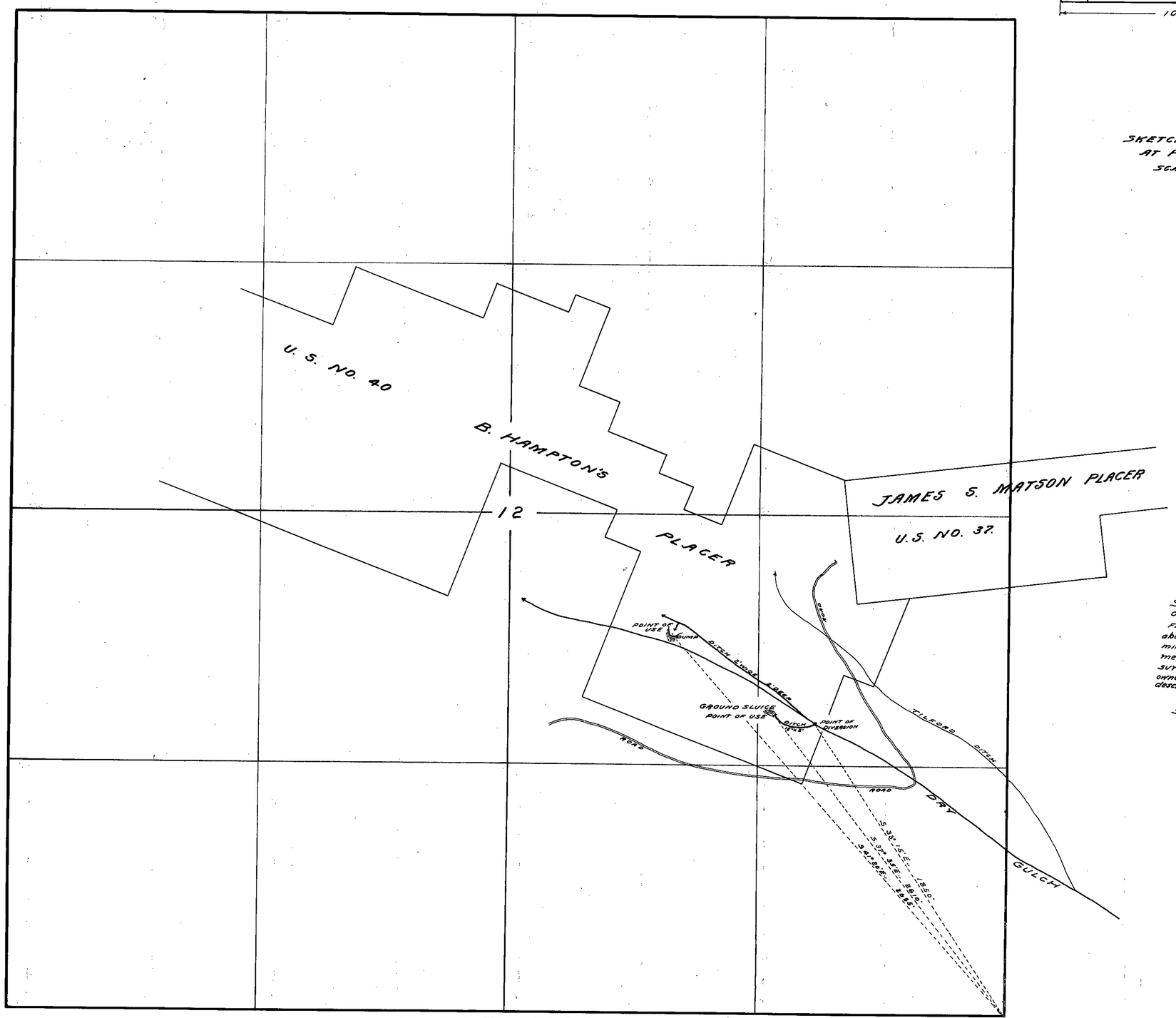

T. 14N., R. 67E., M.D.B.&M.

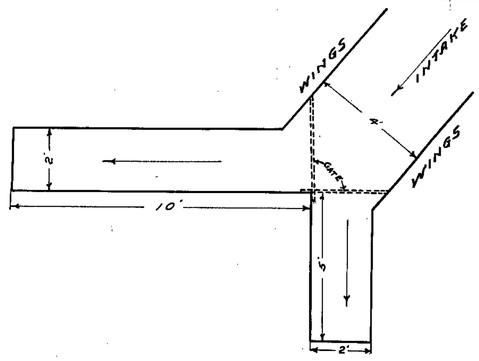

SKETCH OF HEAD GATE
AT POINT OF DIVERSION.
SCALE ½ IN. = 1 FT.

STATE OF NEVADA.
COUNTY OF WHITE PINE. SS.

F.W. MILLARD, being first duly sworn, deposes and says that the above map is a true and accurate plat of the RUSSELL MOYLE placer mining works, as taken from the field notes of a survey made by me, completed on the 20th day of August 1921. That the map and survey were made at the instance of RUSSELL MOYLE, one of the owners of said works, and that it truly represents the works described in PERMIT No. 5499.

F.W. Millard
Surveyor.

Subscribed and sworn to before me this 22nd day of August, 1921.

Chas. Walker
Notary Public in and for White Pine County, Nevada.

562 BK. 4 9-28-21.
for 5.0 c.f.s.

FILED
9/21/21
STATE ENGINEER'S OFFICE

MAP
SHOWING PLACER WORKINGS
OF
RUSSELL MOYLE
PERMIT NO. 5499
SCALE 1 IN. = 300 FT.
8/22/21.

5499