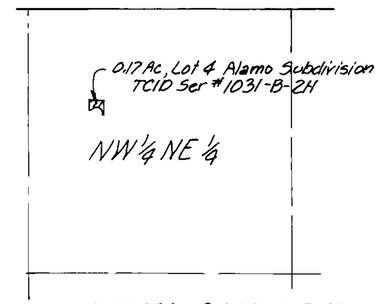

Sec 14 T20N, R24E MDB&M

Existing Place of Use

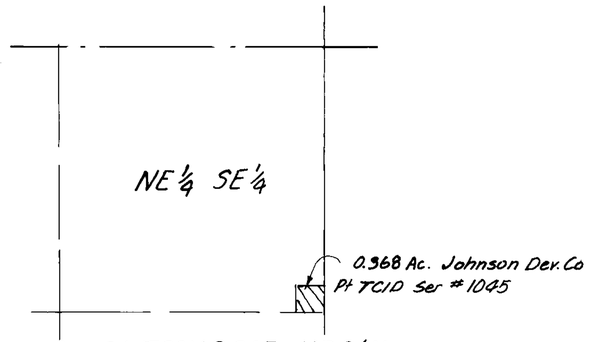

Sec 24 T20N, R24E MDB&M

Existing Place of Use

ACREAGE						
Sec	T	R	Subdiv	Exist. Use Ac.	Proposed Use Ac.	Duty Ac-ft
14	20	24	NW¼NE¼	0.17		0.785
24	20	24	NE¼ SE¼	0.368		1.656
12	20	24	NE¼ SE¼	0.672		3.024
14	20	24	SW¼ SW¼		1.210	5.445

State of Nevada }
County of Lyon } ss

I, Robert W. Millard, being first duly sworn, depose and say, that this map, consisting of one sheet, has been correctly drawn to the designated scale from Truckee - Carson Irrigation District records. That it truly and correctly represents the existing place of use and the proposed place of use of water from the Truckee River in Lyon County by E & B Hoeksema for irrigation purposes. The point of diversion, Derby Dam, is unchanged and boundary of all lands shown by 40 acre subdivisions for the areas proposed to be irrigated are fully and correctly designated hereon.

Robert Millard

215
SWRS

Subscribed and sworn to before me this 14th day of Sept., 1984

Notary Public in and for Lyon County, Nevada.

Notary Public

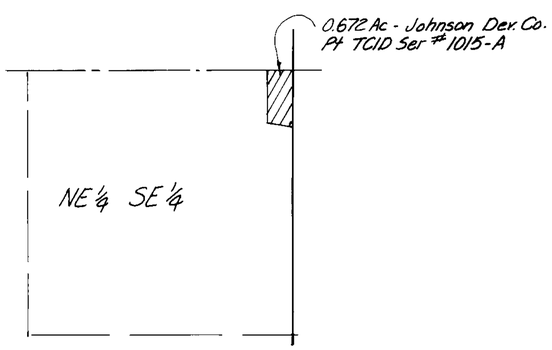

Sec 12 T20N, R24E MDB&M

Existing Place of Use

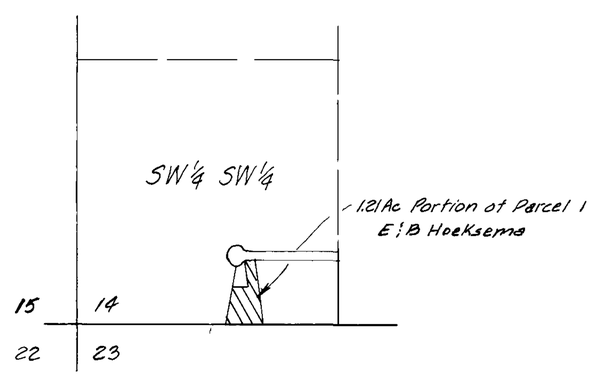

Sec 14 T20N, R24E MDB&M

Propose Place of Use

0 330 660 990 1320

Scale 1" = 400 ft.

48423

'84 SEP 20

STATE ENGINEER'S OFFICE

FILED
SEP 20 1984
STATE ENGINEER'S OFFICE

CERTIFICATE NO 13468 ISSUED 9-16-92

Prepared by:
Liahona Engineering
P.O. Box 1059
Fernley, Nevada 89408
789-1221 575-2563

MAP
To Accompany Application to
Change The Place of Use
For Irrigation Water
By: E & B Hoeksema
From: Truckee River.

48423