ACREAGE						
Sec	T	R	Subdiv	Exist. Use Ac	Proposed Use Ac.	Duty Ac-ft.
12	20	24	NE¼SE¼	2.528		11.376
14	20	24	SW¼SW¼		2.528	11.376

State of Nevada }
County of Lyon } ss

I, Robert W Millard, being first duly sworn, depose and say that this map, consisting of one sheet, has been correctly drawn to the designated scale from Truckee - Carson Irrigation District records. That it truly and correctly represents the existing place of use and the proposed place of use of water from the Truckee River in Lyon County by J & E Johnson for irrigation purposes. The point of diversion, Derby Dam is unchanged and boundary of all lands shown by 40 acre subdivisions for the areas proposed to be irrigated are fully and correctly designated hereon.

[signature] 215
Robert Millard SWRS

Subscribed and sworn to before me this 14th day of September, 1984

Notary Public in and for Lyon County, Nevada.

[signature]
Notary Public.

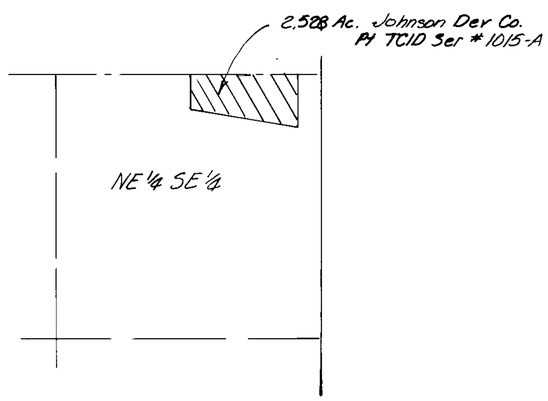

Sec 12 T20N, R24E MDB&M
Existing Place of Use

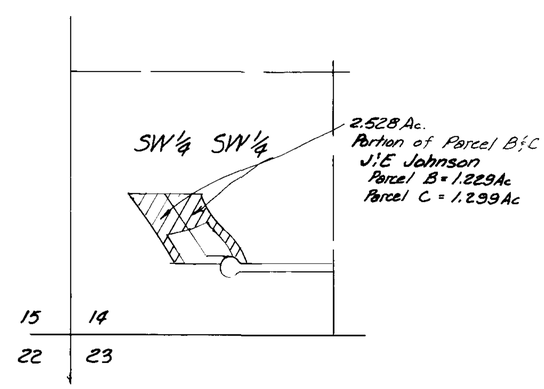

Sec 14 T20N, R24E MDB&M
Proposed Place of Use

0 330 660 990 1320
Scale 1" = 400 ft.

48422

'84 SEP 20 P 3

FILED
SEP 20 1984
STATE ENGINEER'S OFFICE

Prepared by:
Liahona Engineering
P.O. Box 1059
Fernley Nevada 89408
789-1221 575-2563

MAP
TO ACCOMPANY APPLICATION
TO CHANGE THE PLACE OF USE
FOR IRRIGATION WATER
BY: J & E JOHNSON
FROM: TRUCKEE RIVER.

48422