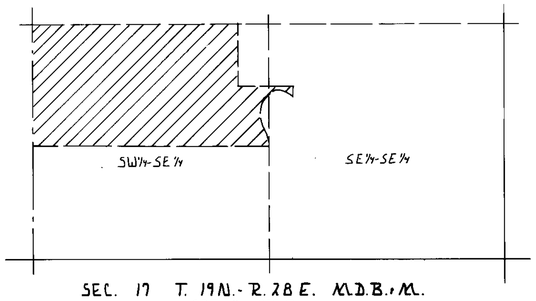

SEC. 17 T. 19N.-R. 28 E. M.D.B.+M.
SER. # 498-2

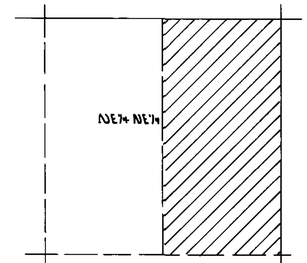

SEC. 17 T. 19N.-R. 27 E. M.D.B.+M.
SER. # 411-1

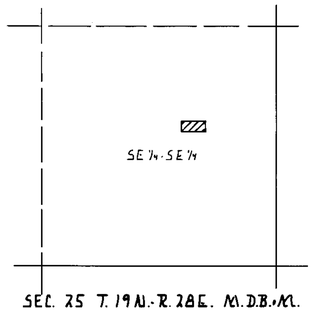

SEC. 25 T. 19N.-R. 28E. M.D.B.+M.

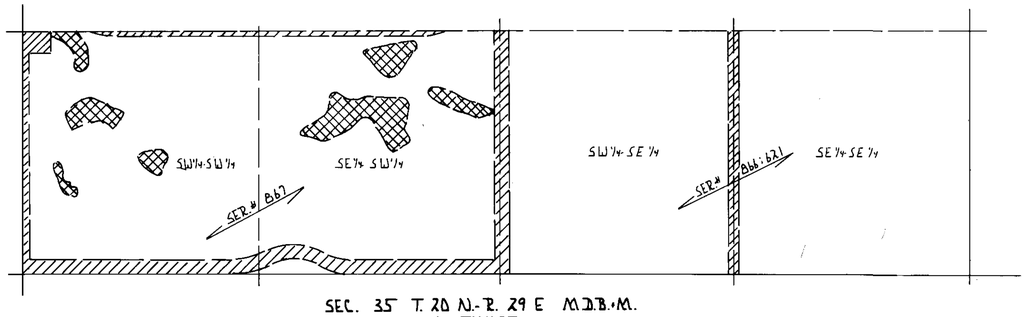

SEC. 35 T. 20 N.-R. 29 E M.D.B.+M.
O. FOWLER

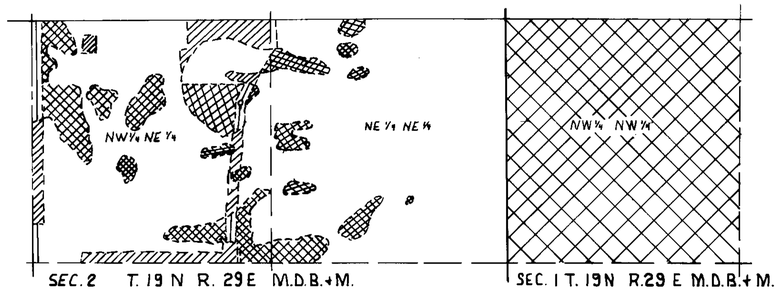

SEC. 2 T. 19 N R. 29E M.D.B.+M.
O. Fowler. #621

SEC. 1 T. 19N R. 29 E M.D.B.+M.
O. Fowler. # 2156

ACREAGE						
SECTION	TOWNSHIP	RANGE	SUBDIVISION	EXISTING ACREAGE OF USE.	PROPOSED ACREAGE OF USE	DUTY AC.-FT.
17	19 N	28 E	SW¼-SE¼	18.5 AC. ✓		
17	19 N	28 E.	SE¼-SE¼	0.3 AC. ✓		
17	19 N	27 E	NE¼-NE¼	20.0 AC. ✓		
25	19 N	28 E	SE¼-SE¼	0.2 AC. ✓		
35	20 N	29 E	SE¼-SE¼	0.9 AC. ✓		
35	20 N	29 E	SW¼-SE¼	2.7 AC. ✓		
35	20 N	29 E	SE¼-SW¼	3.45 AC. ✓	4.0 ✓	
35	20 N	29 E.	SW¼-SW¼	4.11 ✓	2.0 ✓	
2	19 N	29 E	NW¼ NE¼	4.4 AC. ✓	6.0 ✓	
2	19 N	29 E	NE¼ NE¼		3.0 ✓	
1	19 N	29 E	NW¼ NW¼		39.56 ✓	
TOTALS				54.56	54.56	190.96

STATE OF NEVADA
COUNTY OF CHURCHILL } SS

I, GEORGE M. WILSON BEING FIRST DULY SWORN, DEPOSE AND SAY THAT THIS MAP CONSISTING OF ONE SHEET HAS BEEN CORRECTLY DRAWN TO THE DESIGNATED SCALE FROM TRUCKEE-CARSON-IRRIGATION-DISTRICT RECORDS THAT IT IS TRULY AND CORRECTLY REPRESENTS THE EXISTING PLACE OF USE AND THE PROPOSED PLACE OF USE, OF WATER FROM THE TRUCKEE RIVER AND THE CARSON RIVER IN CHURCHILL COUNTY BY

ORVAL FOWLER
APPLICANT

FOR IRRIGATION PURPOSES, THE POINT OF DIVERSION LAHONTON DAM IS UNCHANGED AND THE BOUNDARY OF ALL LANDS SHOWN BY 40 ACRE SUBDIVISIONS FOR THE AREAS PROPOSED TO BE IRRIGATED, ARE FULLY AND CORRECTLY DESIGNATED THEREON.

George M. Wilson
STATE WATER RIGHT SURVEYOR

SUBSCRIBED AND SWORN TO BEFORE ME THIS 17th DAY OF April 1984.
NOTARY PUBLIC IN AND FOR CHURCHILL COUNTY, NEVADA.

Doris J. Morin
NOTARY PUBLIC

DORIS J. MORIN
Notary Public - State of Nevada
Churchill County
My Appointment Expires Aug. 10, 1984

NORTH

SCALE. 1"=400 FT.

0 330 660 990 1320

LEGEND

= EXISTING PLACE OF USE

= PROPOSED PLACE OF USE

RECEIVED
APR 23 1984
STATE ENGINEER'S OFFICE

FILED
APR 23 1984
STATE ENGINEER'S OFFICE

47823

MAP
TO ACCOMPANY APPLICATION TO CHANGE THE PLACE OF USE FOR IRRIGATION WATER.

BY. ORVAL FOWLER

FROM. TRUCKEE RIVER / CARSON RIVER

47823