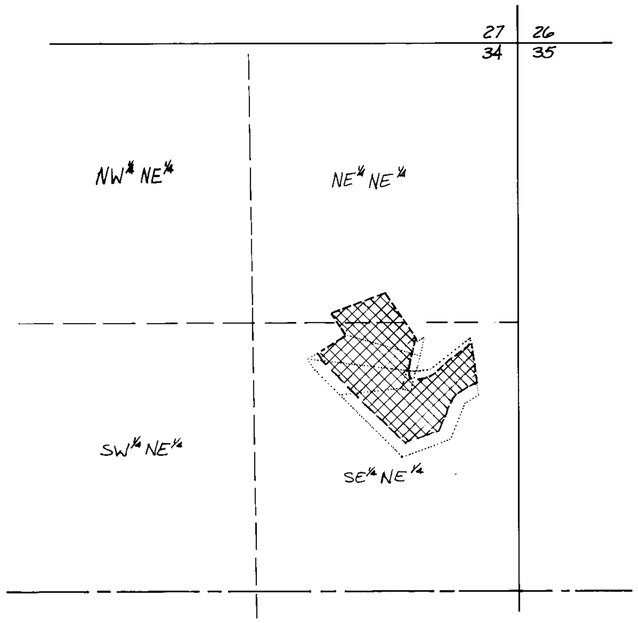

SECTION 34
T.19N., R.28E.

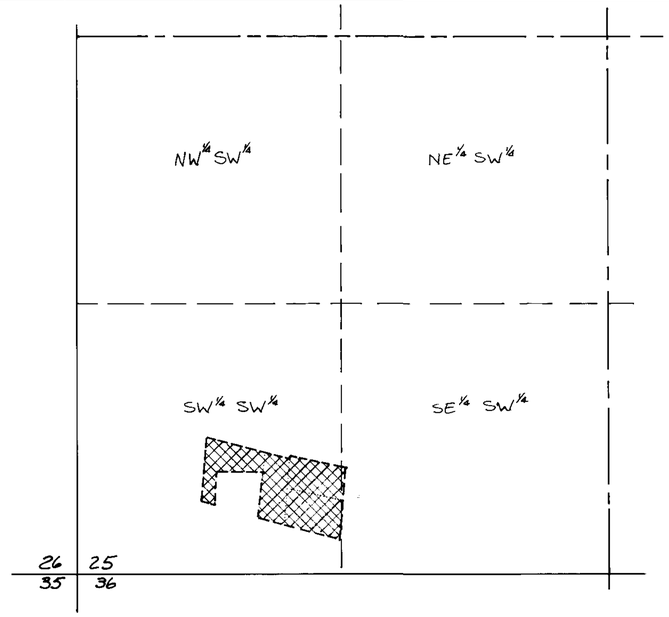

SECTION 25
T.19N., R.28E.

ACREAGE – TOWNSHIP 19 NORTH, RANGE 28 EAST				
SECTION	SUBDIVISION	EXISTING ACREAGE OF USE – ACRE	PROPOSED ACREAGE OF USE – ACRE	DUTY AC-FT/AC
9	SW¼ SW¼	3.65	4.9	4.5
	SE¼ SW¼	1.8	12.0	
25	SW¼ SW¼	4.3	—	3.5
	SE¼ SW¼	0.15	—	
34	NE¼ NE¼	1.6	—	3.5
	SE¼ NE¼	5.4	—	
TOTAL		16.9 AC	16.9 AC	64.6 AC-FT

STATE OF NEVADA, }
COUNTY OF ..... } SS.

I, **John C. Nelson**, being first duly sworn, depose and say that this map, consisting of one sheet, has been correctly drawn to the designated scale from Truckee - Carson Irrigation District records; that is truly and correctly represents the existing location of use and the proposed location of use, of water from Truckee River and Carson River in Churchill County, by Jerry McKnight for irrigation purposes. The point of diversion, Lahonton Dam, is unchanged, and the boundary of all lands, showing by 40 acre subdivisions the areas proposed to be irrigated, are fully and correctly designated thereon.

John C. Nelson
NRS 533

Subscribed and sworn to before me
this 10th day of February, 1984
Notary Public in and for Clark County, Nevada.

Leticia Johnson

LETICIA JOHNSON
Notary Public State of Nevada
Carson City
My Appointment Expires Feb. 25, 1986

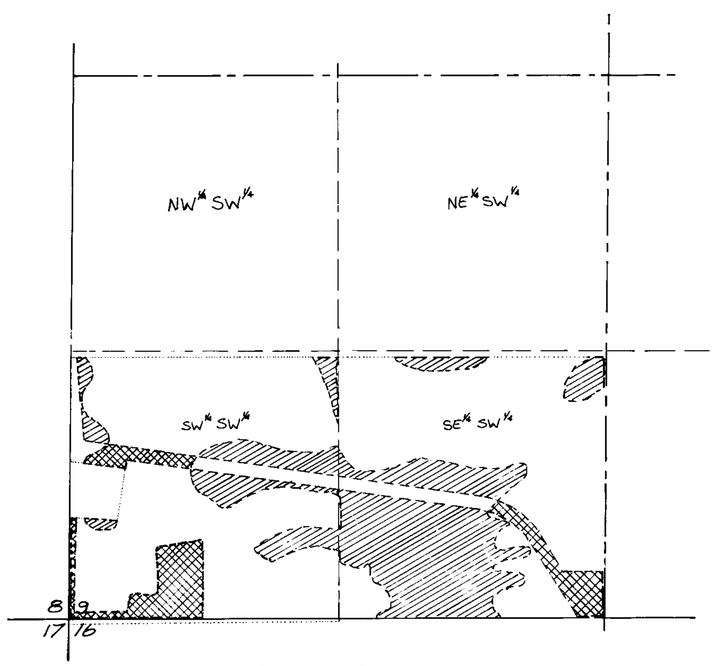

SECTION 9
T.19N., R.28E.

N

LEGEND

- PROPOSED PLACE OF IRRIGATION USE
- EXISTING PLACE OF IRRIGATION USE
- PROPERTY LINE EXTENDED

0 100' 200' 300' 400' 500' 1000' 2000' 3000'
Scale 1" = 400'

47673

FILED
FEB 10 1984

MAP

TO ACCOMPANY APPLICATION TO CHANGE PLACE OF USE FOR IRRIGATION WATER

BY JERRY AND SUSAN MCKNIGHT

FROM TRUCKEE RIVER AND CARSON RIVER

47673