MONSEN ENG. 100 9-80 MC 1603e

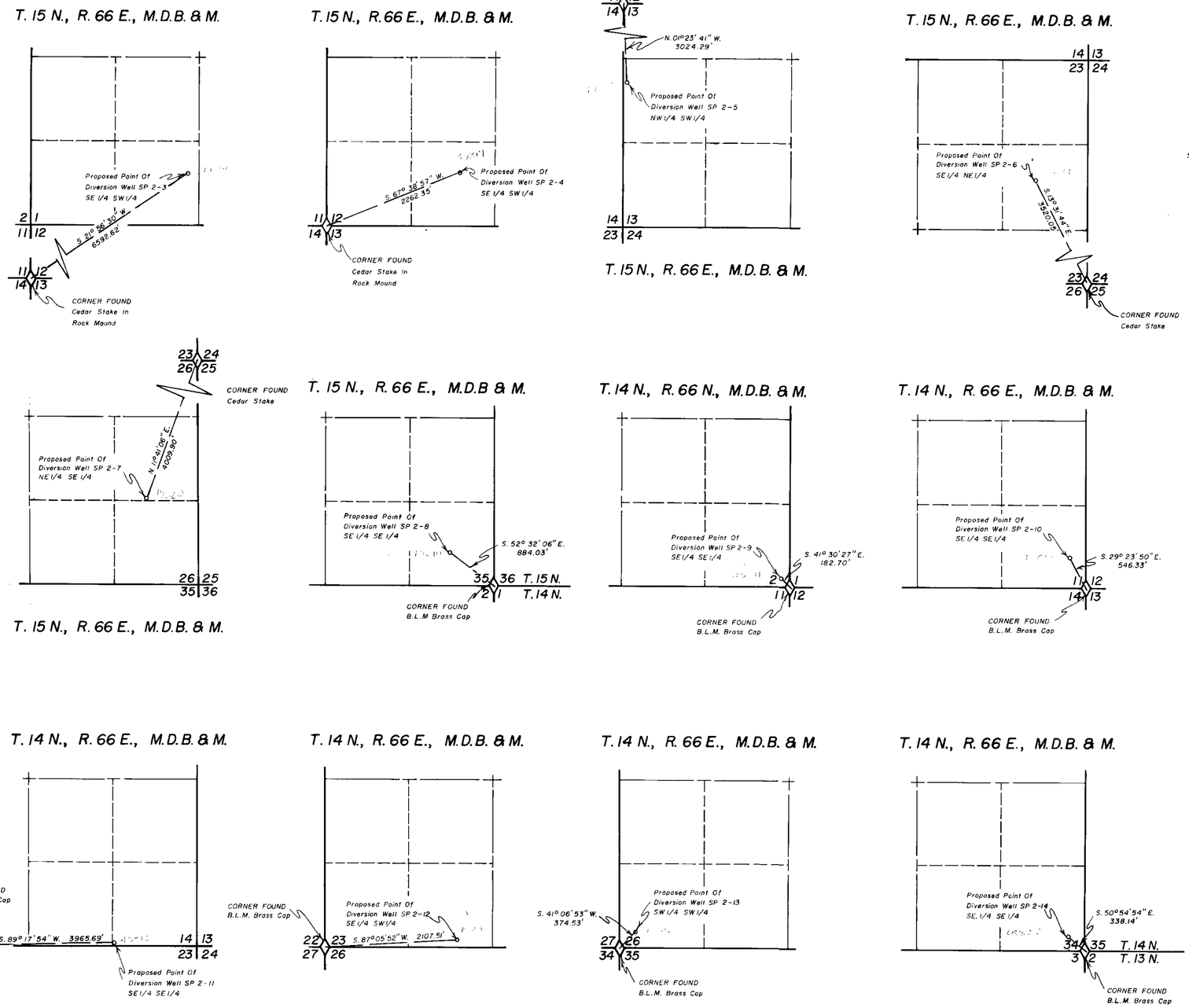

STATE OF NEVADA }
County of White Pine } ss

I, Richard W. Forman, being first duly sworn, depose and say that this map, consisting of **5 sheets**, has been correctly drawn to the designated scale from field notes of a survey made by me ***between the 20th day of April, and the 23rd day of April, 1982***, ***that it truly and correctly represents the proposed location and extent of the works used to divert water from Underground Sources, in*** White Pine County, by ***White Pine County for Industrial*** purposes. That the proposed point of diversion, the approximate location and size of the diverting channel, all reservoirs or basins, the location and names of all other works which will cross or connect with the proposed works ***are fully and correctly designated thereon.***

State Water Right Surveyor

Subscribed and sworn to before me this 10th day of June, 1982

Rose L. White
Notary Public in and for White Pine County, Nevada

ROSE L. WHITE
Notary Public, State of Nevada
White Pine County, Nevada
Commission Expires Nov. 18, 1985

0 1000 2000 3000 4000
SCALE 1" = 1000'

FILED
SEP

SHEET No. 4 OF 5 SHEETS

MAP TO ACCOMPANY APPLICATION TO CHANGE THE POINT OF DIVERSION & PLACE OF USE UNDER APPLICATION NOS. 43434 THROUGH 43439

FOR INDUSTRIAL PURPOSES

BY WHITE PINE COUNTY

FROM UNDERGROUND SOURCES

SURVEYED & MAPPED BY
BOUNDY & FORMAN, INC.
ELY, NEVADA
APRIL, 1982

MONSEN ENG. 100 9-80 MC 1603

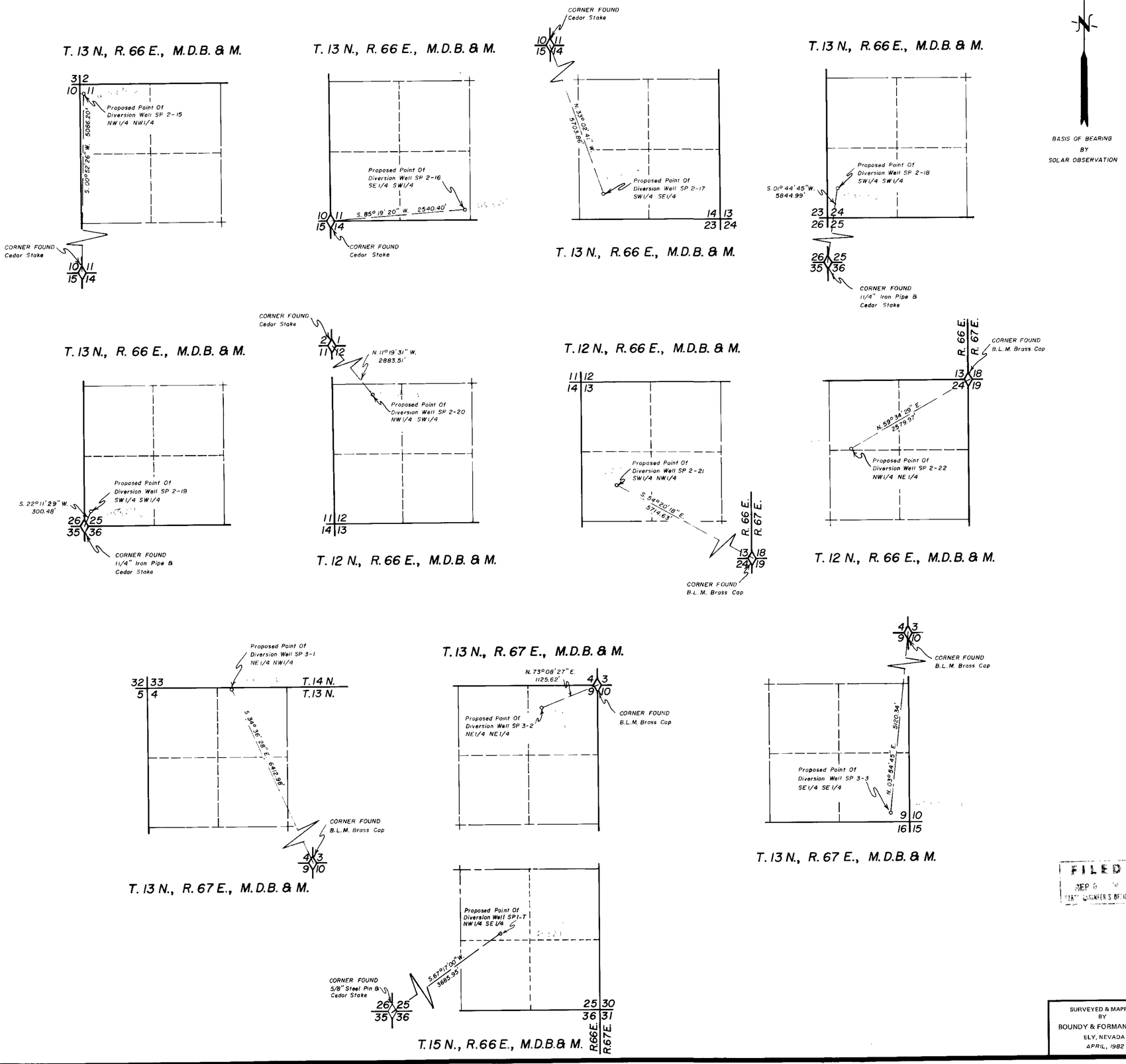

STATE OF NEVADA }
County of White Pine } ss

I, Richard W. Forman, being first duly sworn, depose and say that this map, consisting of *5 sheets*, has been correctly drawn to the designated scale from field notes of a survey made by me *between the 20th day of April, and the 23rd day of April, 1982; that it truly and correctly represents the proposed location and extent of the works used to divert water from Underground Sources, in* White Pine County, by *White Pine County for Industrial* purposes. That the proposed point of diversion, the approximate location and size of all other works which will cross or connect with the proposed works *are fully and correctly designated thereon.*

Richard W. Forman
State Water Right Surveyor

Subscribed and sworn to before me this 10th day of June, 1982

Rose L. White
Notary Public in and for White Pine County, Nevada

ROSE L. WHITE
Notary Public, State of Nevada
White Pine County, Nevada
Commission Expires Nov. 18, 1985

FILED
SEP
STATE ENGINEER'S OFFICE

SHEET No. 5 OF 5 SHEETS

MAP TO ACCOMPANY APPLICATION TO CHANGE THE POINT OF DIVERSION & PLACE OF USE UNDER APPLICATION NOS. 43434 THROUGH 43439

FOR INDUSTRIAL PURPOSES

BY WHITE PINE COUNTY

FROM UNDERGROUND SOURCES

SURVEYED & MAPPED BY
BOUNDY & FORMAN, INC.
ELY, NEVADA
APRIL, 1982

45833 45832 45831 45830 45829 45828 45827 45826 45825 45824 45823 45822 45821

45820 45819 45818 45817 45816 45815 45814 45813 45812 45811 45810 45809 45808 45807 45806 45805 45804 45803 45802 45801 45800 45799

45798

MONSEN ENG. 100 9-80 MC 1603e

MOUNT DIABLO BASE & MERIDIAN

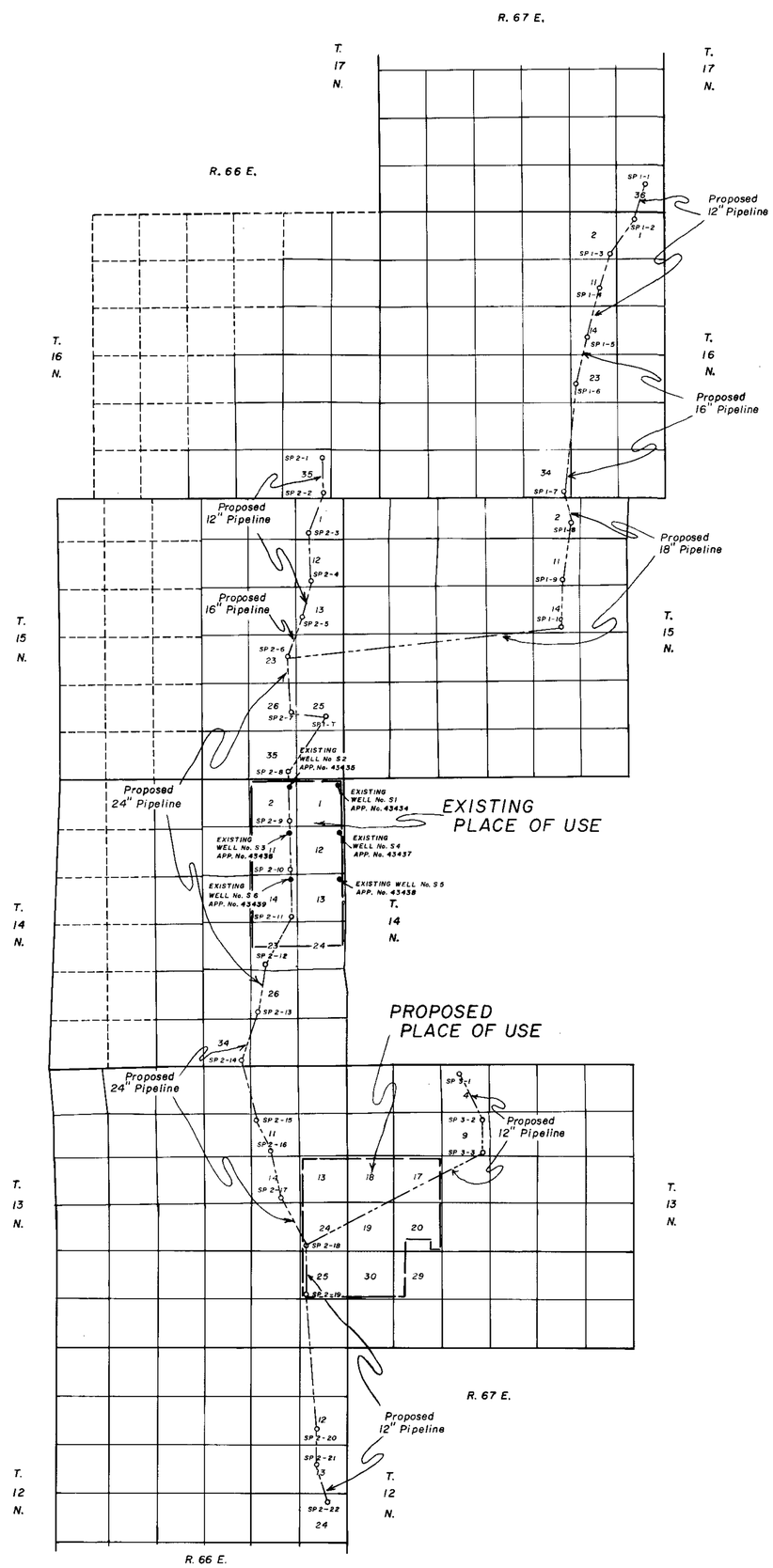

BASIS OF BEARING
BY
SOLAR OBSERVATION

STATE OF NEVADA }
County of White Pine } ss

I, Richard W. Forman, being first duly sworn, depose and say that this map, consisting of *5 sheets*, has been correctly drawn to the designated scale from field notes of a survey made by me *between the 20th day of April, and 23rd day of April, 1982*, *that it truly and correctly represents the proposed location and extent of the works used to divert water from Underground Sources, in* White Pine County, by *White Pine County for Industrial* purposes. That the proposed point of diversion, the approximate location and size of the diverting channel, all reservoirs or basins, the location and names of all other works which will cross or connect with the proposed works, *are fully and correctly designated thereon.*

State Water Right Surveyor

Subscribed and sworn to before me this 10th day of June, 1982

Notary Public in and for White Pine County, Nevada

0 10,000 20,000 30,000 40,000

SCALE 1:100 000

FILED
SEP 23 '82
STATE ENGINEER'S OFFICE

45798-855

VICINITY MAP

SHEET No. 1 OF 5 SHEETS

MAP TO ACCOMPANY APPLICATION TO CHANGE THE POINT OF DIVERSION & PLACE OF USE UNDER APPLICATION NOS. 43434 THROUGH 43439

FOR INDUSTRIAL PURPOSES

BY WHITE PINE COUNTY

FROM UNDERGROUND SOURCES

SURVEYED & MAPPED
BY
BOUNDY & FORMAN, INC.
ELY, NEVADA
APRIL, 1982

45833 45832 45831 45830 45829 45828 45827 45826 45825 45824 45823 45822 45821 45820 45819 45818 45817 45816 45815 45814 45813 45812 45811 45810 45809 45808 45807 45806 45805 45804 45803 45802 45801 45800 45799 **45798**

MONSEN ENG. 100 9-80 MC 1603a

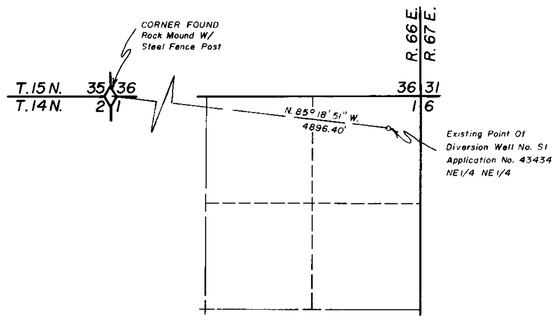

T.14N., R.66E., M.D.B. & M.

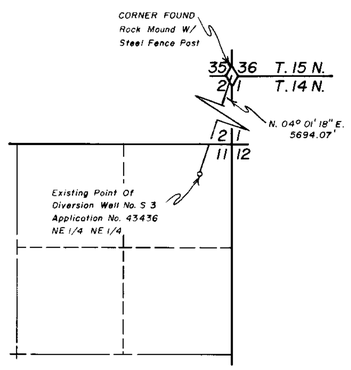

T.14N., R.66E., M.D.B. & M.

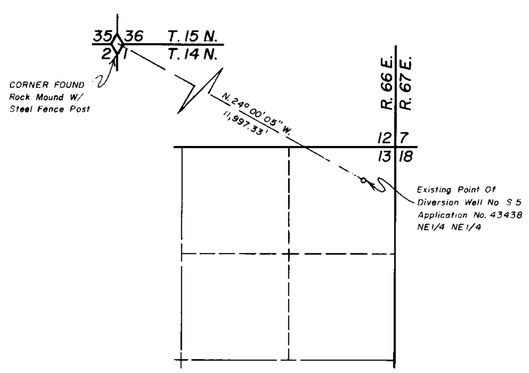

T.14N., R.66E., M.D.B. & M.

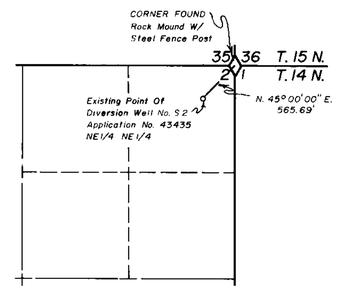

T.14N., R.66E., M.D.B. & M.

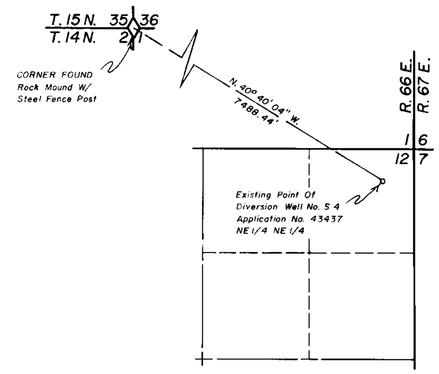

T.14N., R.66E., M.D.B. & M.

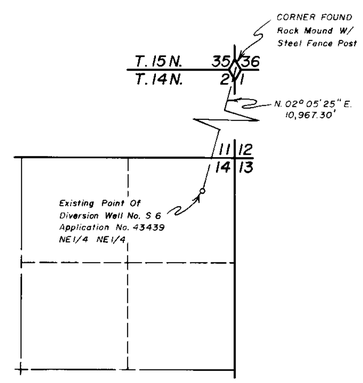

T.14N., R.66E., M.D.B. & M.

BASIS OF BEARING
BY
SOLAR OBSERVATION

STATE OF NEVADA }
County of White Pine } ss

I, Richard W. Forman, being first duly sworn, depose and say that this map, consisting of 5 sheets, has been correctly drawn to the designated scale from field notes of a survey made by me *between the 20th day of April, and the 23rd day of April, 1982, that it truly and correctly represents the proposed location and extent of the works used to divert water from Underground Sources, in* White Pine County, by *White Pine County for Industrial* purposes. That the proposed point of diversion, the approximate location and size of the diverting channel, all reservoirs or basins, the location and names of all other works which will cross or connect with the proposed works, *are fully and correctly designated thereon.*

State Water Right Surveyor

Subscribed and sworn to before me this 10th day of June, 1982

Notary Public in and for White Pine County, Nevada

ROSE L. WHITE
Notary Public State of Nevada
White Pine County, Nevada
Commission Expires Nov. 18, 1985

0 1000 2000 3000 4000
SCALE 1" = 1000

FILED
DEP. STATE ENGINEER

SHEET No. 2 OF 5 SHEETS

MAP TO ACCOMPANY APPLICATION TO CHANGE THE POINT OF DIVERSION & PLACE OF USE UNDER APPLICATION NOS. 43434 THROUGH 43439

FOR INDUSTRIAL PURPOSES

BY WHITE PINE COUNTY

FROM UNDERGROUND SOURCES

SURVEYED & MAPPED
BY
BOUNDY & FORMAN, INC.
ELY, NEVADA
APRIL, 1982

45833 45832 45831 45830 45829 45828 45827 45826 45825 45824 45823 45822 45821 45820 45819 45818 45817 45816 45815 45814 45813 45812 45811 45810 45809 45808 45807 45806 45805 45804 45803 45802 45801 45800 45799 45798

MONSEN ENG. 100 9-80 M.C. 1503e

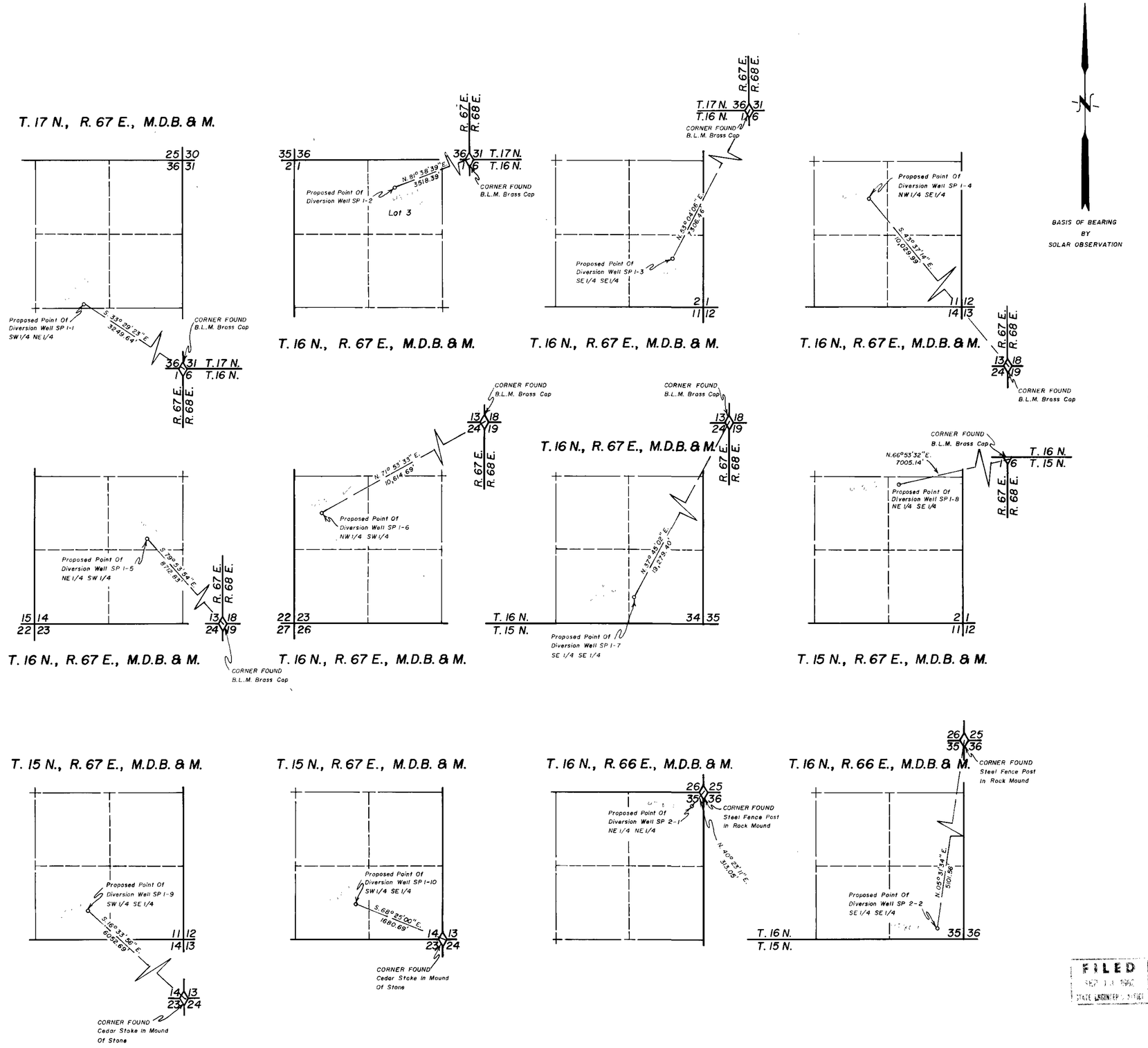

STATE OF NEVADA }
County of White Pine } ss

I, Richard W. Forman, being first duly sworn, depose and say that this map, consisting of 5 ***sheets,*** has been correctly drawn to the designated scale from field notes of a survey made by me ***between the 20th day of April, and the 23rd day of April, 1982, that it truly and correctly represents the proposed location and extent of the works used to divert water from Underground Sources,*** in White Pine County, by ***White Pine County for Industrial*** purposes. That the proposed point of diversion, the approximate location and size of the diverting channel, all reservoirs or basins, the location and names of all other works which will cross or connect with the proposed works, ***are fully and correctly designated thereon.***

State Water Right Surveyor

Subscribed and sworn to before me this 10th day of June, 1982

Notary Public in and for White Pine County, Nevada

ROSE L. WHITE
Notary Public State of Nevada
White Pine County, Nevada
Commission Expires Nov. 18, 1985

0 1000 2000 3000 4000
SCALE 1" = 1000'

FILED
SEP 13 1982
STATE ENGINEER'S OFFICE

SHEET No. 3 OF 5 SHEETS

MAP TO ACCOMPANY APPLICATION TO CHANGE THE POINT OF DIVERSION & PLACE OF USE UNDER APPLICATION NOS. 43434 THROUGH 43439

FOR INDUSTRIAL PURPOSES

BY WHITE PINE COUNTY

FROM UNDERGROUND SOURCES

SURVEYED & MAPPED BY
BOUNDY & FORMAN, INC.
ELY, NEVADA
APRIL, 1982

45833 45832 45831 45830 45829 45828 45827 45826 45825 45824 45823 45822 45821 45820 45819 45818 45817 45816 45815 45814 45813 45812 45811 45810 45809 45808 45807 45806 45805 45804 45803 45802 45801 45800 45799 45798