PORTIONS OF SECTION 7 & 18, T.4S., R.67E., M.D.B.&M.
LINCOLN COUNTY, NEVADA

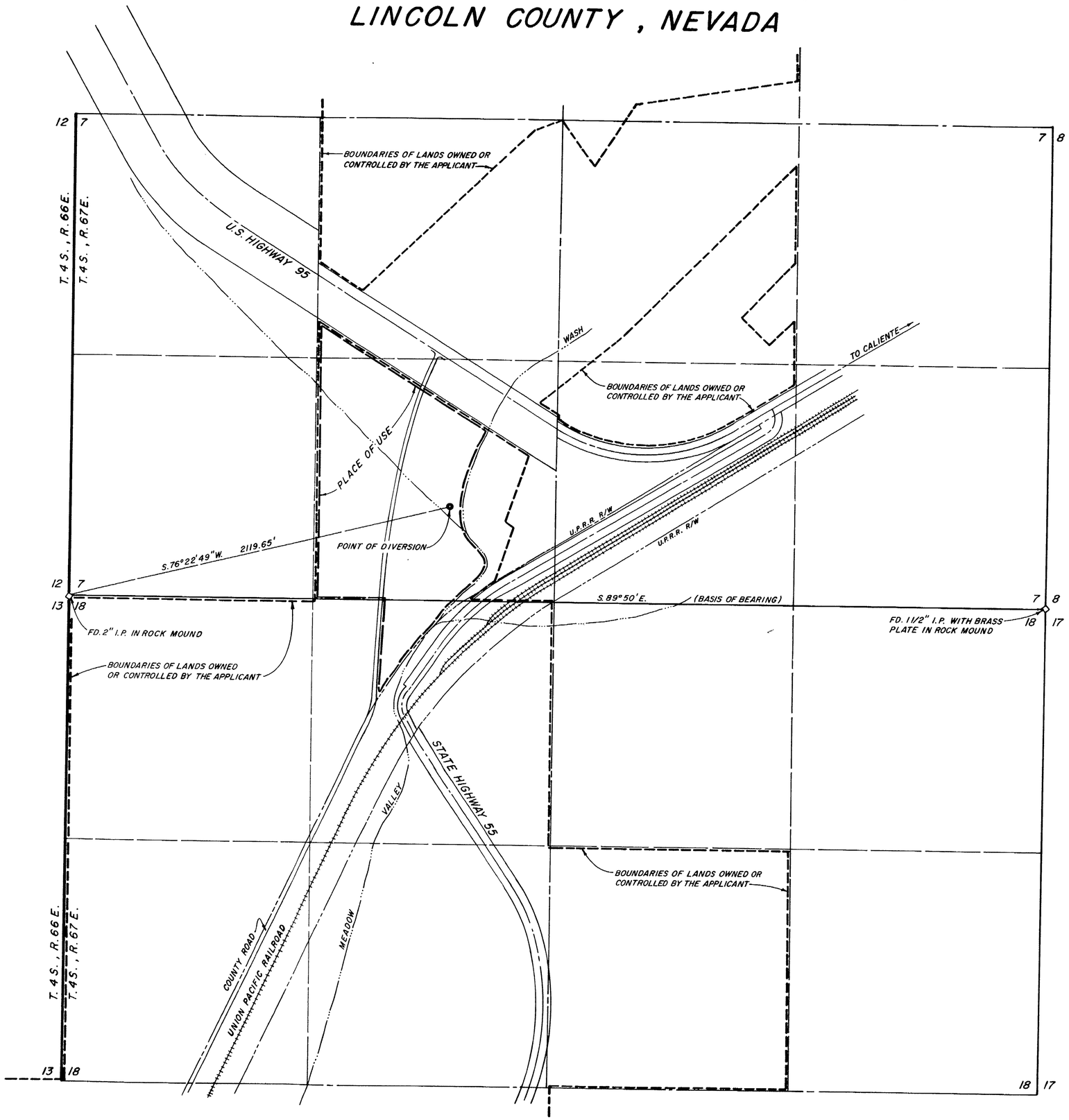

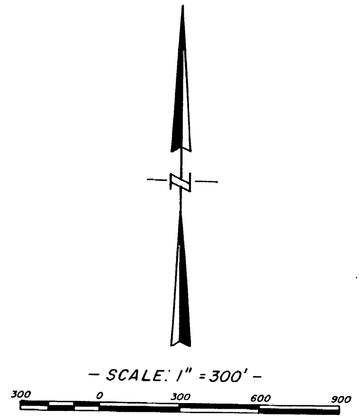

- NOTE -

BASIS OF BEARING: S.89°50'E., SOUTH BOUNDARY LINE OF THE CITY OF CALIENTE AND SOUTH LINE OF SECTION 7, T.4S., R.67E., M.D.B.&M.

STATE OF NEVADA }
COUNTY OF CLARK } SS

I, R. LEROY GIVENS, BEING FIRST DULY SWORN DEPOSE AND SAY THAT THIS MAP, CONSISTING OF ONE SHEET, HAS BEEN CORRECTLY DRAWN TO THE DESIGNATED SCALE FROM FIELD NOTES OF A SURVEY MADE UNDER MY SUPERVISION AND DIRECTION ON THIS 25TH DAY OF NOVEMBER, 1975, THAT IT TRULY AND CORRECTLY REPRESENTS THE PROPOSED LOCATION AND EXTENT OF THE WORKS USED TO DIVERT WATER FROM AN UNDERGROUND SOURCE IN LINCOLN COUNTY BY SUMMA CORPORATION FOR IRRIGATION AND DOMESTIC USE AND THAT THE BOUNDARIES OF THE LANDS EMBODIED IN THE TRACT OWNED OR CONTROLLED BY THE APPLICANTS AND UPON WHICH IT IS PROPOSED TO USE THE WATER APPLIED FOR, ARE FULLY AND CORRECTLY DESIGNATED THEREON.

R. LeRoy Givens
STATE WATER RIGHT SURVEYOR Nº 378

SUBSCRIBED AND SWORN TO BEFORE ME THIS 26th DAY OF November, 1975

Phyllis J. Knight
NOTARY PUBLIC IN AND FOR CLARK COUNTY, NEVADA

MY COMMISSION EXPIRES June 20, 1976

PHYLLIS J. KNIGHT
Notary Public—State of Nevada
COUNTY OF CLARK
My Commission Expires June 20, 1976

FILED
DEC 3 1975
STATE ENGINEER'S OFFICE

OFFICE
STATE ENGINEER
1975 DEC 3 AM 10 00

MAP TO ACCOMPANY APPLICATION
FOR
IRRIGATION AND DOMESTIC USE
BY
SUMMA CORPORATION
FROM
AN UNDERGROUND SOURCE
LINCOLN COUNTY, NEVADA

29834