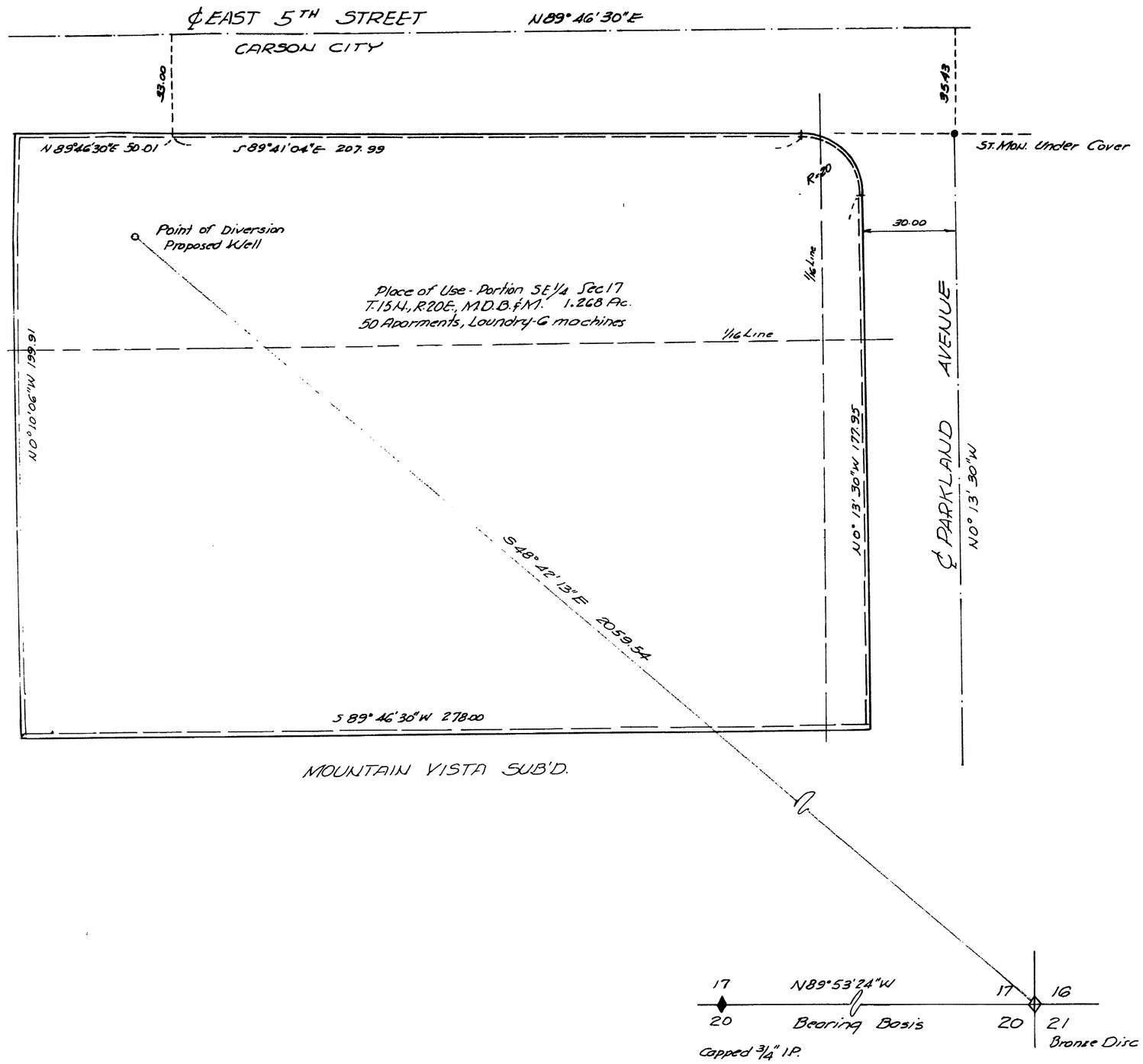


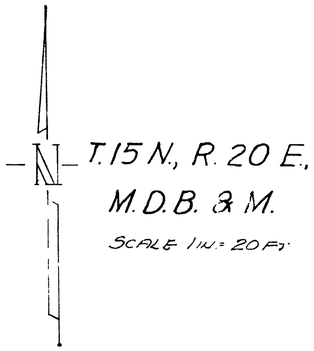


STATE OF NEVADA
CARSON CITY SS

I William J Johnstone, being first duly sworn depose and say that this map, consisting of one sheet has been correctly drawn to the designated scale from field notes of a survey made by me on the 24th day of Sept., 1971, that it correctly represent the location and extent of the proposed works to divert water from an underground source in Carson City Quasi-Municipal and Domestic Use (Apartments) by Lee Rowland, that the point of diversion, the place and manner of use are fully designated hereon.

William J Johnstone
State Water Right Surveyor No. 229

10 0 50 100
SCALE 1IN.= 20FT.

CERTIFICATE No. 8813 ISSUED 8-20-76

Subscribed and sworn to before me this 1st day of Oct. 1971

Jean Williams
Notary Public in and for Carson City, State of Nevada
My Commission Expires Sept. 24, 1973

JEAN WILLIAMS
Notary Public - State of Nevada
Ormsby County
My Commission Expires Sept 24 1973

FILED
OCT 1 1971
STATE ENGINEER'S OFFICE

MAP TO ACCOMPANY
APPLICATION TO APPROPRIATE WATER
FOR
QUASI-MUNICIPAL & DOMESTIC
APARTMENTS
BY
LEE ROWLAND
FROM
AN UNDERGROUND SOURCE
SEPTEMBER 24, 1971