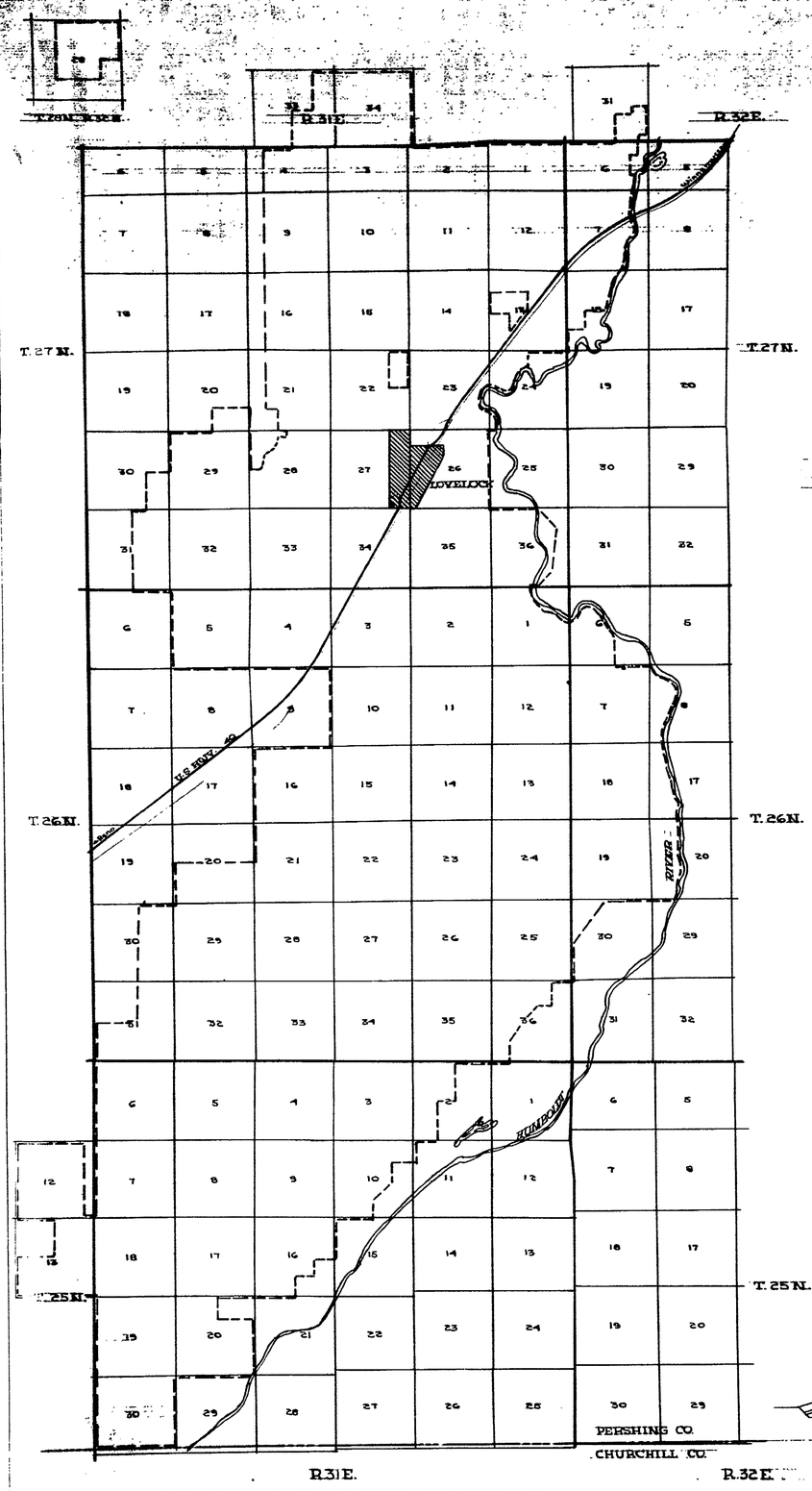

PLACE of USE AFTER TRANSFER

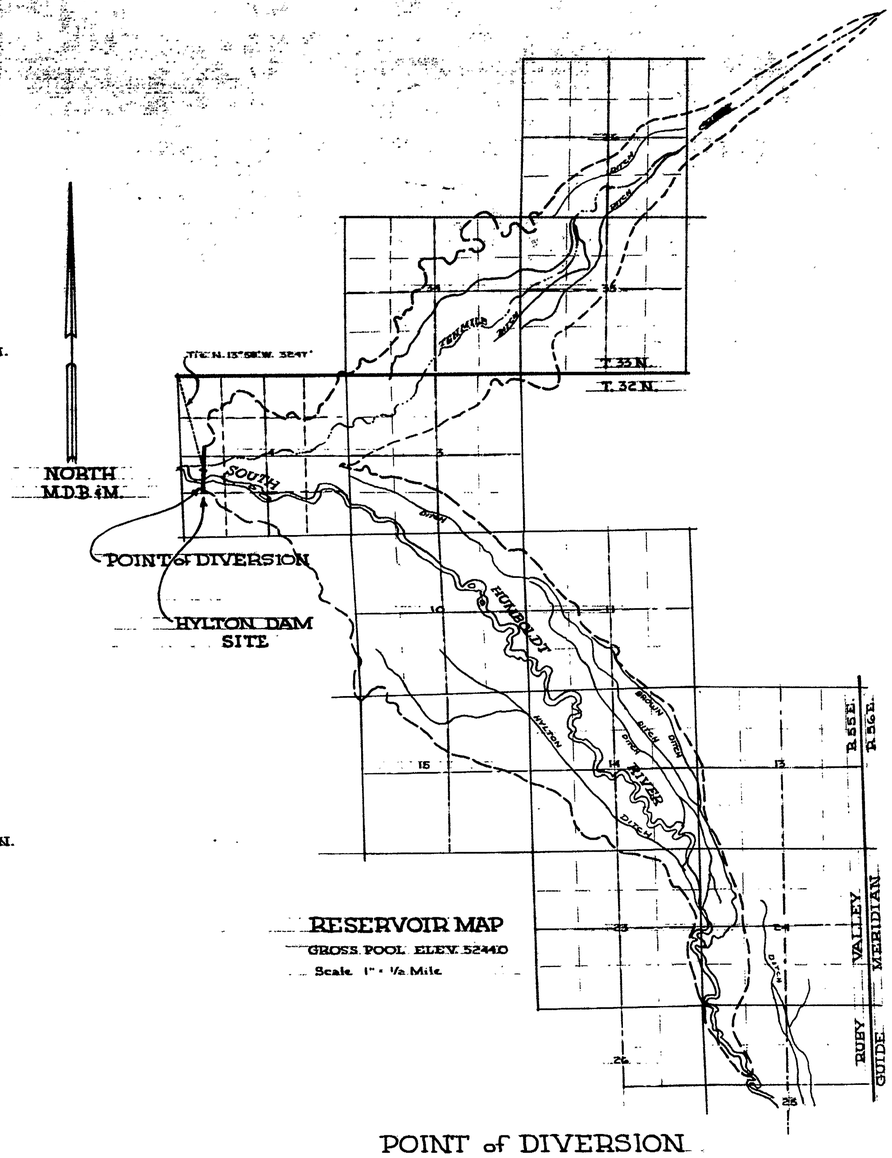

RESERVOIR MAP

GROSS POOL ELEV. 5244.0

Scale 1" = 1/2 Mile

POINT of DIVERSION

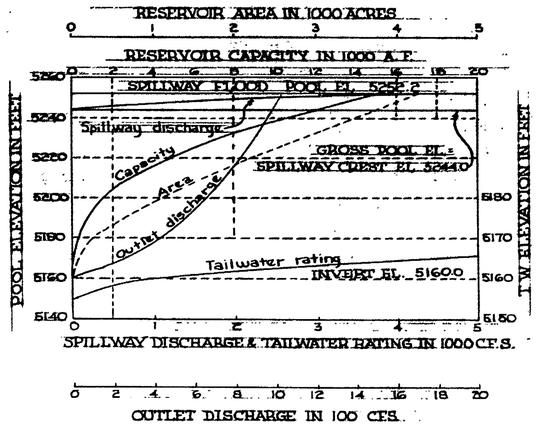

AREA, CAPACITY AND DISCHARGE CURVES

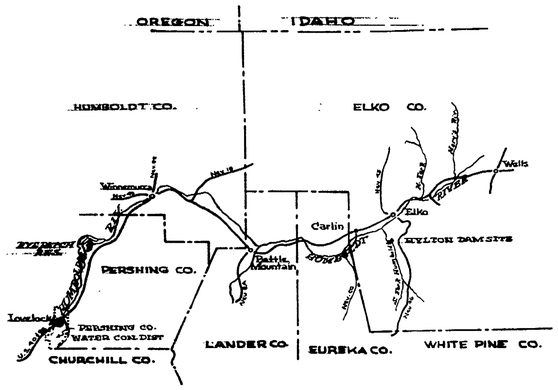

KEY MAP

Scale - None

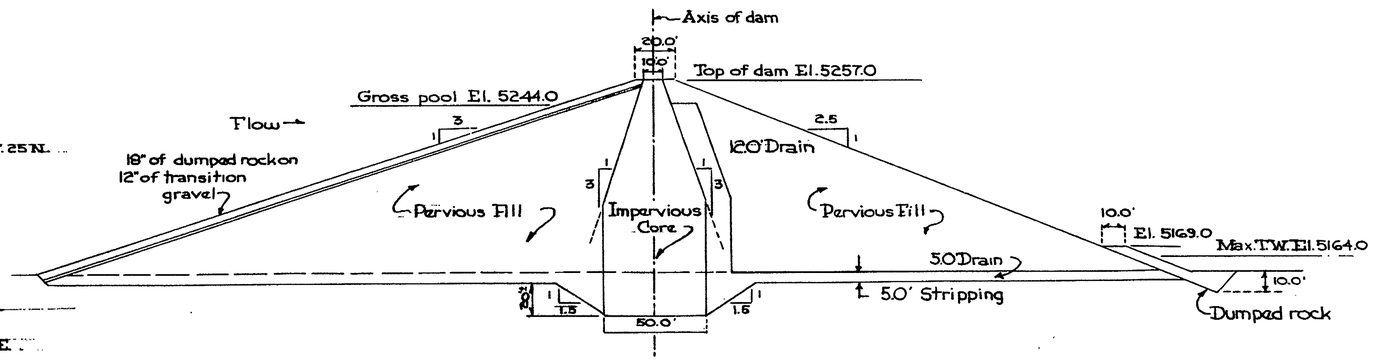

MAXIMUM EMBANKMENT SECTION

Scale: 1 In. = 40 Ft.

NOTE

All data shown on this map pertaining to dam and Reservoir has been obtained from the U.S. Army Corps of Engineers Sacramento District Map # H.U. 2-24-8 Plate II

I, Robert S. Leighton, being duly sworn, depose and say that this map consisting of one sheet, as compiled from material furnish by the U.S. Army Corps of Engineers, Sacramento District, and the Pershing County Water Conservation District, does show the proposed point of diversion and place of use for waters of the S. Fork of the Humboldt River a tributary of the Humboldt River, by the Pershing County Water Conservation District.

Robert S. Leighton
State Water Right Surveyor
R.E. & L.S. # 397

Subscribed and sworn to before me this 28th day of April, 1969. Giovanna A. Sequin
NOTARY

FILED
APR 28 1969
STATE ENGINEER'S OFFICE

OFFICE
STATE ENGINEER

1969 APR 28 PM 3 26

GIOVANNA A. SEQUIN
Notary Public — State of Nevada
Washoe County
My Commission Expires Jan. 11, 1973

MAP TO ACCOMPANY APPLICATION BY P.C.W.C.D. TO APPROPRIATE THE WATERS OF THE S. HUMBOLDT RIV. FOR STORAGE, DOMESTIC AND IRRIGATION USE.

24881-1

24887