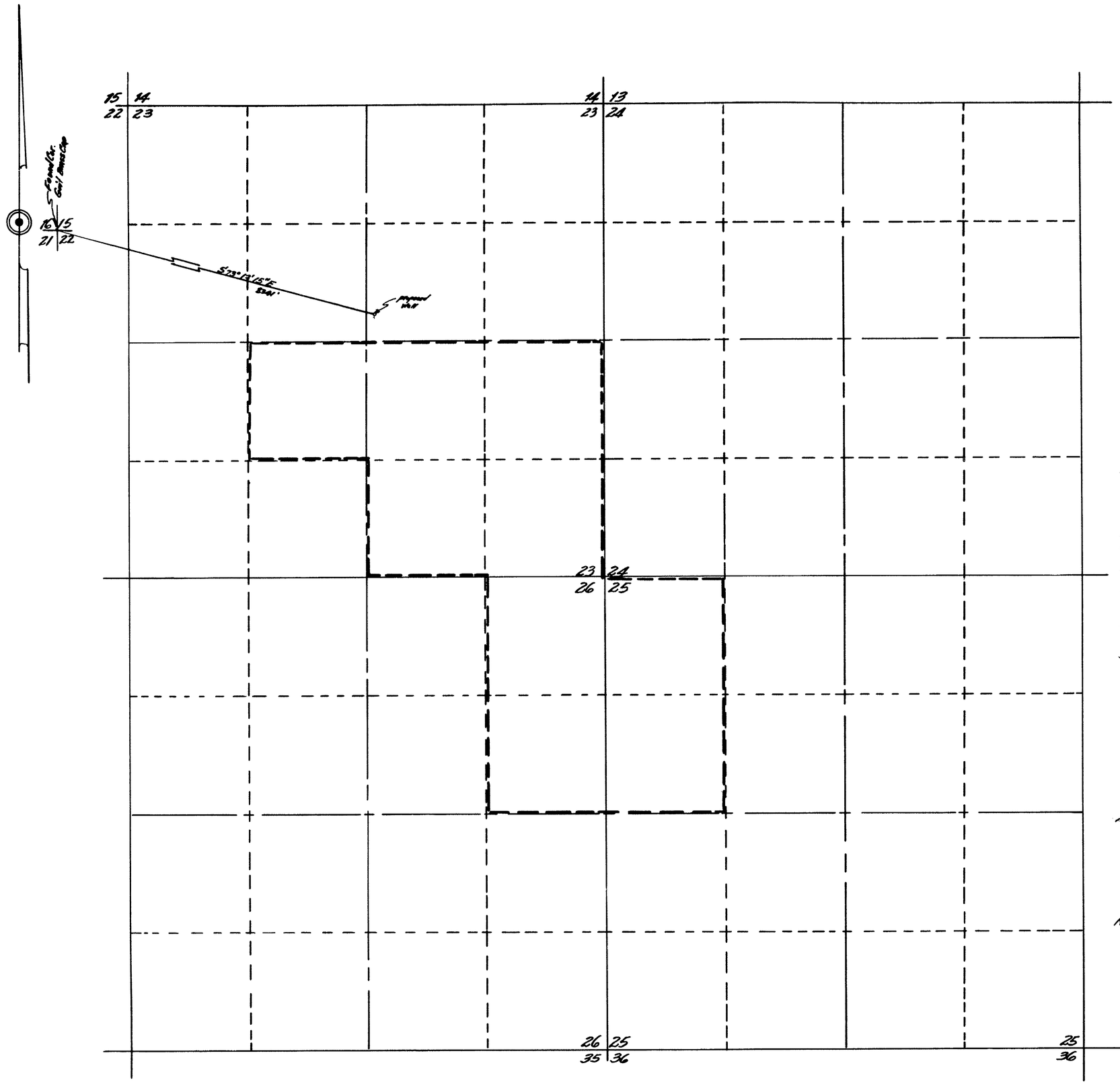

T 42 N, R. 39 E, M.D.B.&M.

STATE OF NEVADA
County of Humboldt } S.S.

I, Richard M. Black, being first duly sworn depose and say that this map, consisting of one sheet, has been correctly drawn to the designated scale from field notes of a survey made by me between the 15th day of August and the 25th day of August, 1959, that it truly and correctly represents the proposed location and extent of the works about to divert water from underground in Humboldt County by RUDOLPH H. SCHWARTZ for irrigation and domestic purposes. That the true point of diversion the approximate location and size of the diverting channel, all reservoirs or basins, the location and names of all other works which will cross or connect with the proposed works, and the boundary of all lands showing by 40-Acre Sub-divisions the areas proposed to be irrigated, are fully and correctly designated thereon.

Richard M. Black
STATE WATER RIGHT SURVEYOR

Subscribed and sworn to before me this 27th day of August, 1959

Donalora Leighton
Notary Public in and for Humboldt County, Nevada.
My Comm. Exp: 1/19/61

SCALE ~ 1" = 600'

FILED
Aug. 28, 1959
STATE ENGINEER'S OFFICE

STATE ENGINEER
1959 AUG 28 AM 11 30

MAP

TO ACCOMPANY APPLICATION TO APPROPRIATE WATER FOR IRRIGATION AND DOMESTIC USE BY ~ RUDOLPH H. SCHWARTZ FROM UNDERGROUND

17985