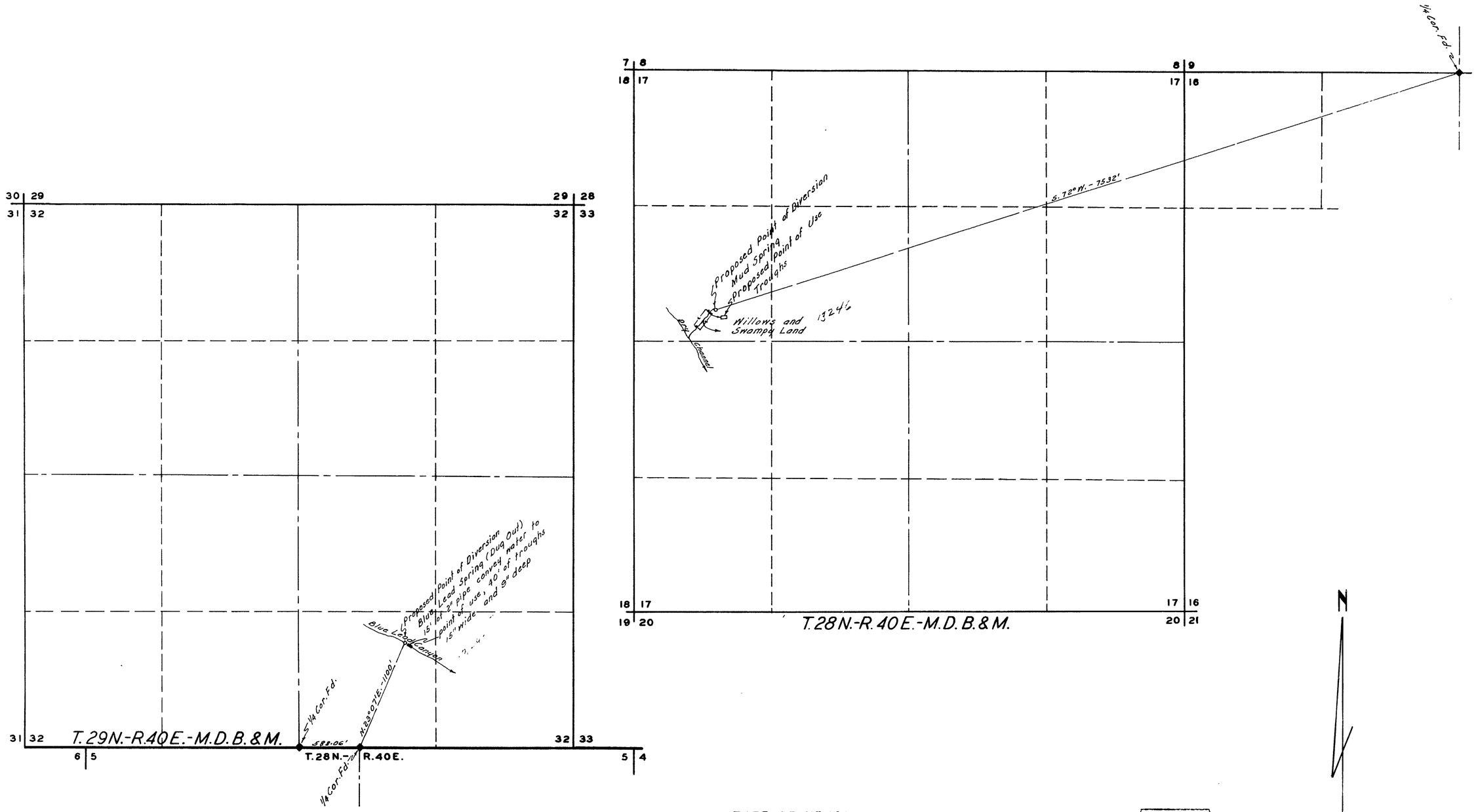

STATE OF NEVADA } S.S.
COUNTY OF ELKO }

I, W.H. Settelmeyer, being first duly sworn, depose and say that this map, consisting of one sheet, has been correctly drawn to the designated scale from field notes of a survey made by me between the 27th day of March and the 30th day of March 1928; that it truly and correctly represents the location and extent of the proposed works used to divert water from springs in Pershing County, by the Joe Saval Estate, for stockwatering purposes. That the proposed points of diversion, the approximate location and size of the diverting channel or other conduit, the place and manner of use, and the locations and names of all other works or streams, which are crossed by or connected with the said works, are fully and correctly designated thereon.

W.H. Settelmeyer
State Water Right Surveyor.

Subscribed and sworn to before me this 1st day of February, 1950.

Viola McFarlane
Notary Public in and for Elko County, Nevada.

My commission expires Nov. 5-1952

FILED
FEB. 2, 1950
STATE ENGINEER'S OFFICE

GRAPHIC SCALE
HUNDREDS OF FEET
5 4 3 2 1 0 2 4 6 8 10 15
SCALE - 1" = 500'

MAP
TO ACCOMPANY APPLICATION TO APPROPRIATE WATER FOR STOCKWATERING BY JOE SAVAL ESTATE FROM MUD SPRING AND BLUE LEAD SPRING IN PERSHING COUNTY

13245-13246