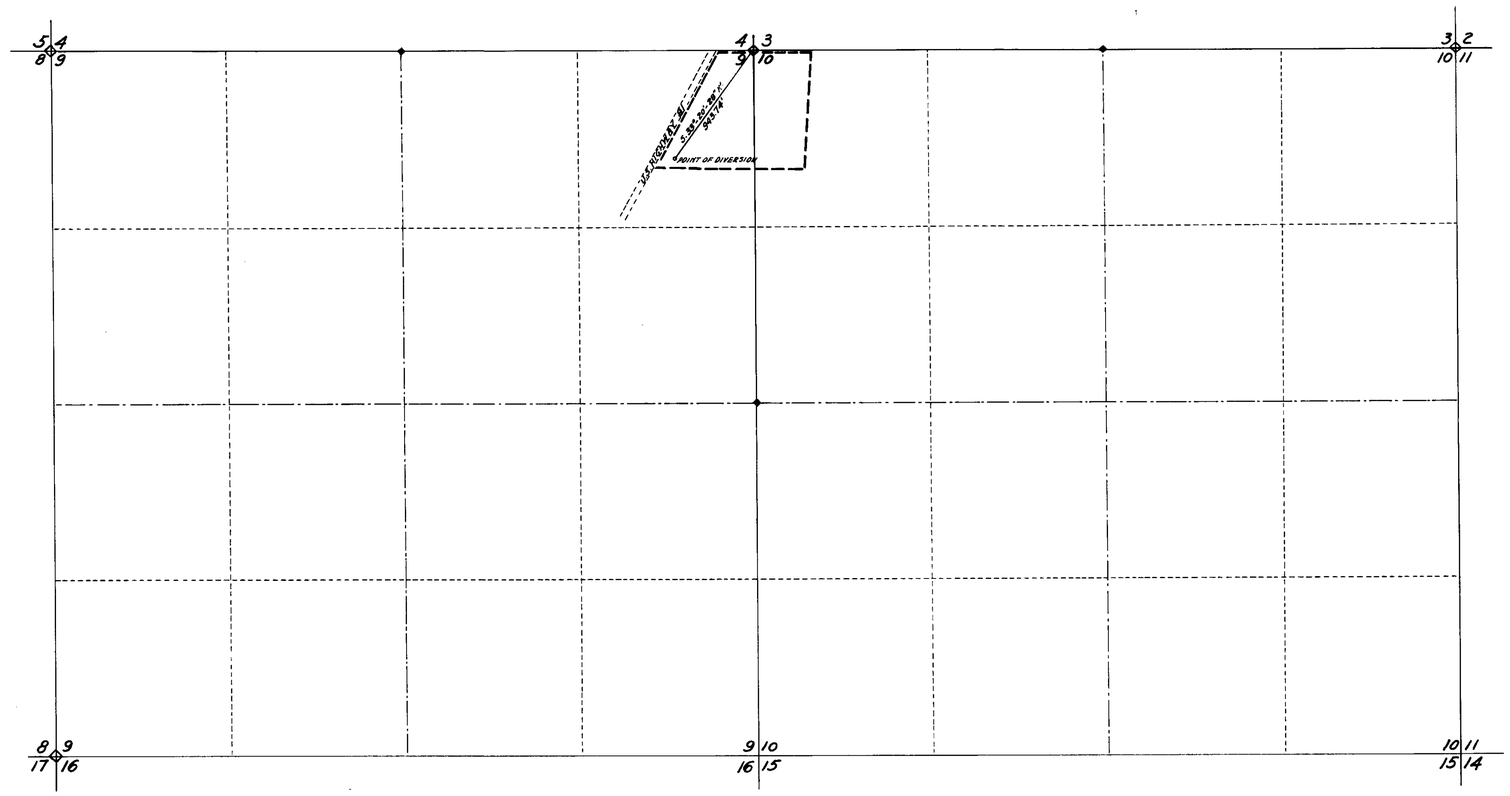

T. 21 S., R. 61 E., MDB & M.

Enlarged map of that portion of VEGAS VILLAGE tract lying in Section 9 adjacent to U.S. Highway 91, with line of traverse along margins of roads from well to section corner to assist in checking location of the well should buildings about to be erected interfere with direct sight.

		NORTH	SOUTH	EAST	WEST
N. 62°-00' W.	148.00	69.48			130.68
N. 28°-00' E.	835.57	737.76		392.28	
S. 87°-13'-45" E.	257.40		18.83	257.10	
		807.24		649.38	
		-18.83		-130.68	
		788.41		518.70	

BEARING:- WELL FROM SEC. CORNER S. 33°-20'-28" W. 943.74'

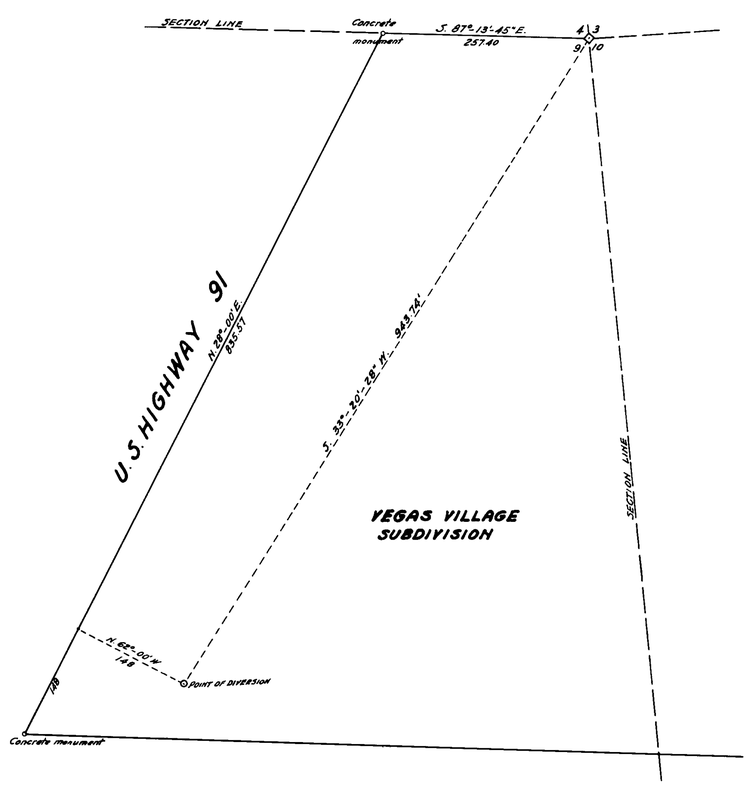

SCALE 1 IN = 100 FT.

State of Nevada }
County of Clark } ss:

I, Frank D. Rathbun, being first duly sworn, depose and say that this map, consisting of one sheet, has been correctly drawn to the designated scale from field notes of a survey made under my supervision and direction completed on the 20th day of October, 1942; that it truly and correctly represents the proposed location and extent of the works used to divert water from Las Vegas Artesian Basin, County of Clark, State of Nevada, by **VEGAS VILLAGE, INC.** for **DOMESTIC & QUASI-MUNICIPAL** purposes; that the proposed point of diversion, the approximate location and size of diverting channel, all reservoirs or basins, the location and names of all other works which will cross or connect with the proposed works are fully and correctly represented thereon.

Frank D. Rathbun
STATE WATER RIGHT SURVEYOR

Subscribed and sworn to before me this 25th day of November 1942.

E. M. Mann
NOTARY PUBLIC IN AND FOR COUNTY OF CLARK, STATE OF NEVADA

My commission expires [illegible]

FILED
Nov. 25, 1942
STATE ENGINEER'S OFFICE

Basis of Bearings: ℄ of U.S. Highway 91, given as N. 28°-00' E. by State Highway Dept.

0 100 200 300 400 500 750 1000 1500 2000 2500 3000
SCALE IN FEET

AMENDED MAP
TO ACCOMPANY APPLICATION
TO APPROPRIATE WATER FOR
DOMESTIC & QUASI-MUNICIPAL PURPOSES
BY
VEGAS VILLAGE, INC.
FROM
LAS VEGAS ARTESIAN BASIN
CLARK COUNTY — NEVADA

OFFICE OF
FRANK D. RATHBUN
REGISTERED ENGINEER
209 BECKLEY BLDG.-LAS VEGAS, NEV.

10885

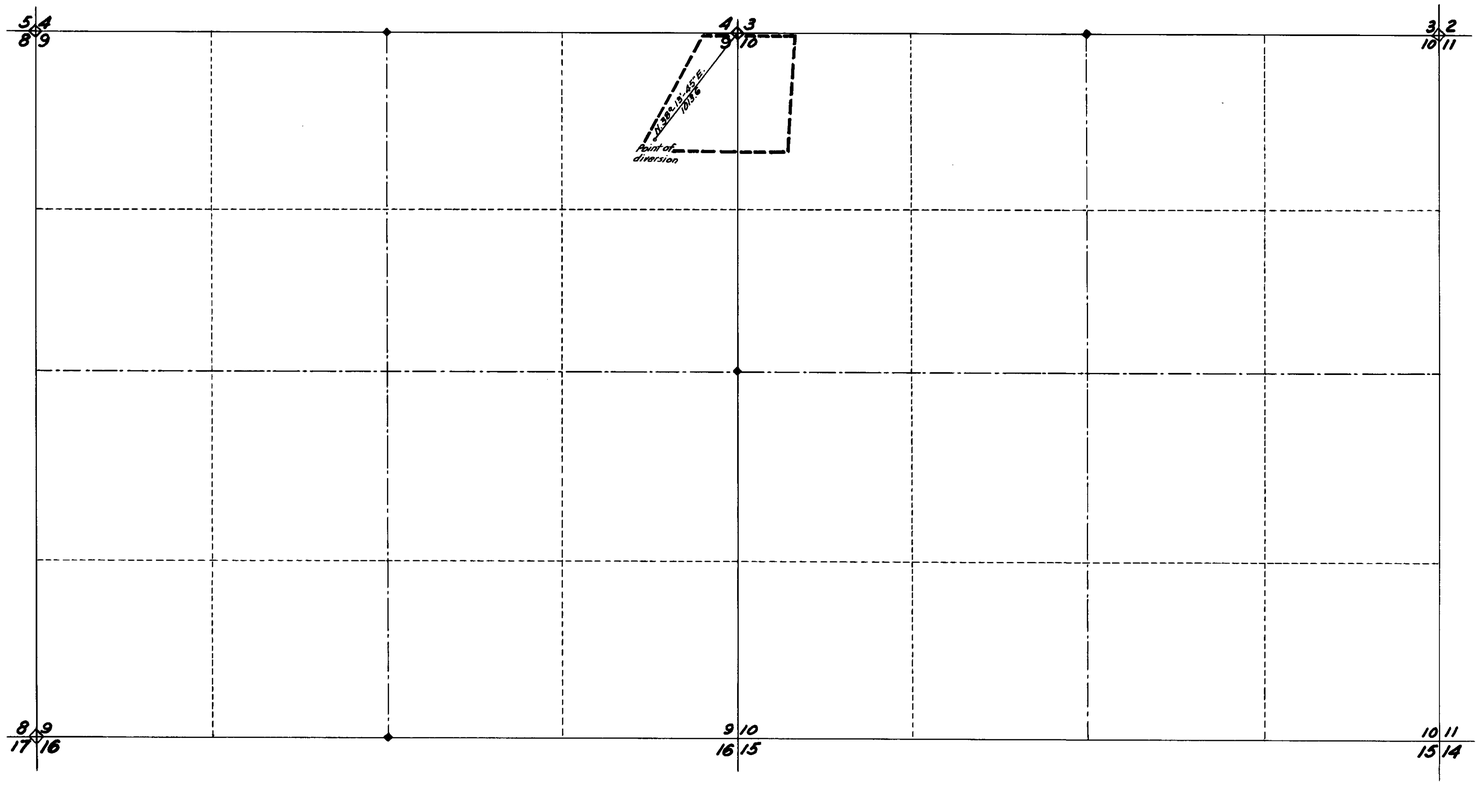

T. 21 S., R. 61 E., MDB&M

NOTE: Area enclosed within heavy broken line adjacent to well constitutes proposed subdivision VEGAS VILLAGE.

Basis of Bearings:
℄ Highway 91-466 at N section line of Sec. 9, N. 28°00'E. as shown on map by State Highway Dept.

0 100 500 1000 1500 2000 2500 3000
Scale in feet

State of Nevada }
County of Clark } SS:

I, Frank D. Rathbun, being first duly sworn, depose and say that this map, consisting of one sheet, has been correctly drawn to the designated scale from field notes of a survey made under my supervision and direction completed on the 5th day of October, 1942; that it truly and correctly represents the proposed location and extent of the works used to divert water from Las Vegas Artesian Basin, County of Clark, State of Nevada, by VEGAS VILLAGE, INC. for DOMESTIC & QUASI-MUNICIPAL purposes; that the proposed point of diversion, the approximate location and size of diverting channel, all reservoirs or basins, the location and names of all other works which will cross or connect with the proposed works are fully and correctly represented thereon.

Frank D. Rathbun
STATE WATER RIGHT SURVEYOR

FILED
October 23, 1942

Subscribed and sworn to before me this 15th day of October, 1942.

Anna Moss
NOTARY PUBLIC IN AND FOR CLARK COUNTY, NEVADA

My commission expires Feb. 3, 1946

OFFICE OF
FRANK D. RATHBUN
REGISTERED ENGINEER
209 BECKLEY BLDG—LAS VEGAS, NEV.

MAP TO ACCOMPANY APPLICATION TO APPROPRIATE WATER FOR
DOMESTIC & QUASI-MUNICIPAL PURPOSES
BY
VEGAS VILLAGE, INC.
FROM
LAS VEGAS ARTESIAN BASIN
CLARK COUNTY — NEVADA

See Amended Map 10885