MAP TO ACCOMPANY APPLICATION FOR CHANGE OF PLACE OF USE AND POINT OF DIVERSION OF A PTN. OF PERMIT NO. 60644

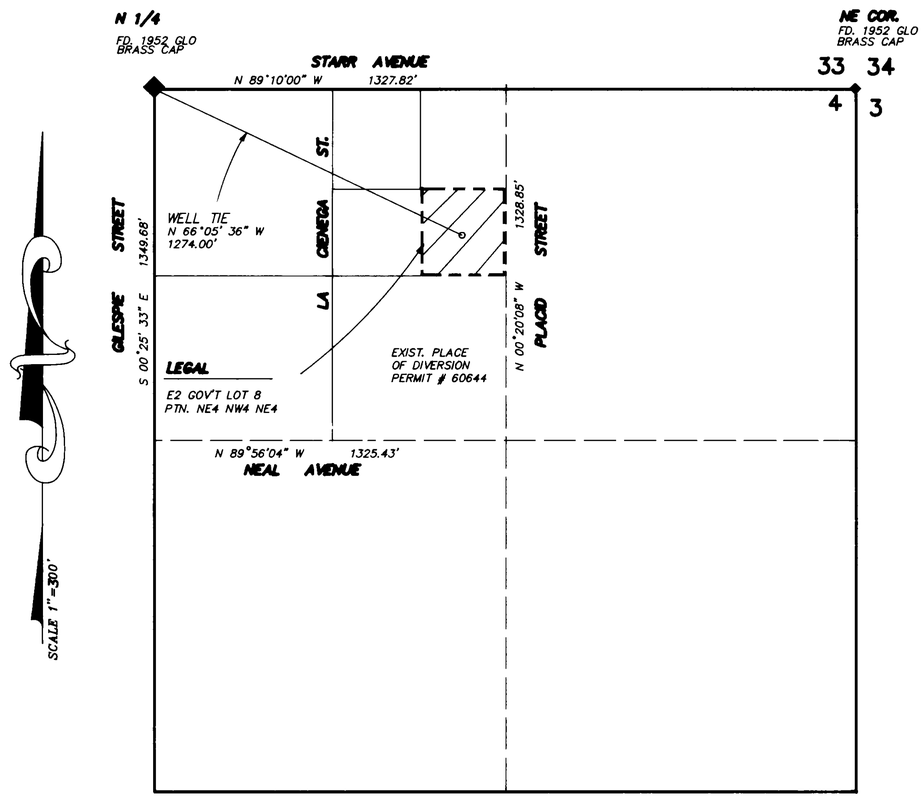

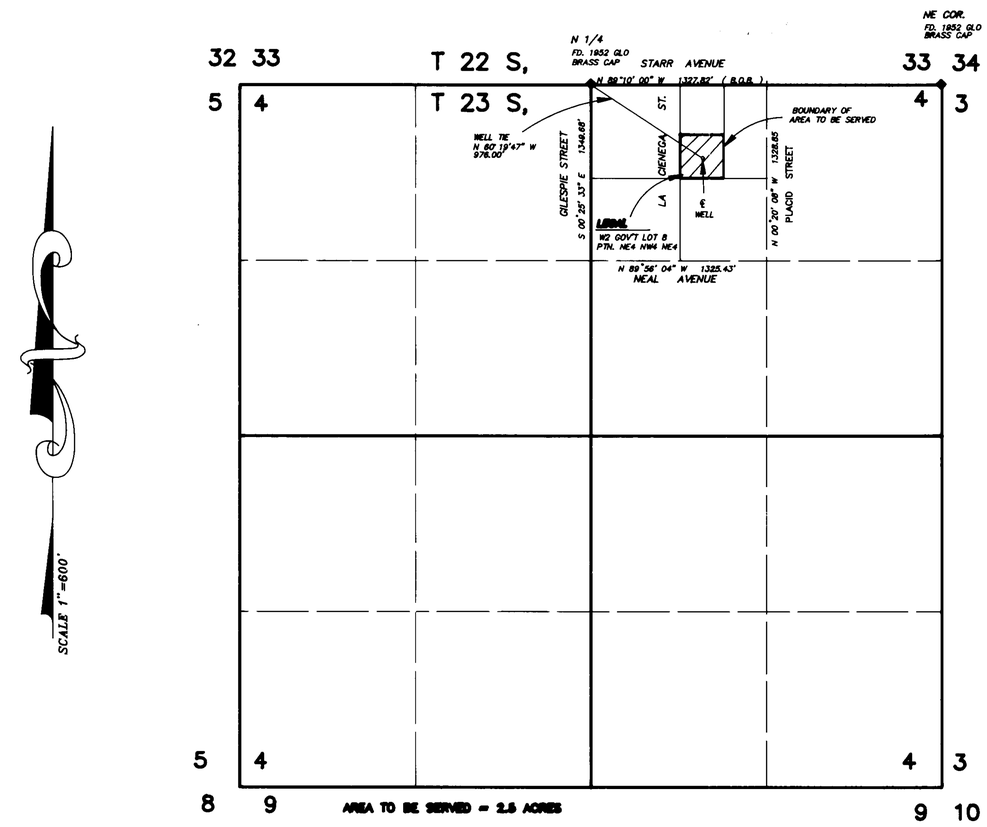

◆ = FOUND POINTS AS SHOWN

(B.O.B.) = BASIS OF BEARINGS

EXISTING PLACE OF USE AND POINT OF DIVERSION

SEC. 4, T 23 S, R 61 E, M.D.M.

GRAPHIC SCALE

300 0 300 600 1200

(IN FEET)
1 inch = 300 ft.

PROPOSED PLACE OF USE & POINT OF DIVERSION

SEC. 4, T 23 S, R 61 E, M.D.M.

GRAPHIC SCALE

600 0 600 1200 2400

(IN FEET)
1 inch = 600 ft.

STATE OF NEVADA
COUNTY OF CLARK S.S

I, ROBERT FULSTONE, BEING FIRST DULY SWORN DEPOSE AND SAY THAT THIS MAP CONSISTING OF ONE SHEET HAS BEEN CORRECTLY DRAWN TO THE DESIGNATED SCALE FROM THE FIELD NOTES OF THE SURVEY MADE UNDER MY SUPERVISION AND DIRECTION ON 7/11/94 AND THAT IT TRUELY AND CORRECTLY REPRESENTS THE PROPOSED LOCATION AND EXTENT OF THE WORKS USED TO DIVERT WATER FROM AN UNDERGROUND SOURCE THE LAS VEGAS VALLEY BASIN BY K.I.W.I. LIMITED FOR QUASI-MUNICIPAL PURPOSES USE, THAT THE PROPOSED POINT OF DIVERSION, THE APPROXIMATE LOCATION AND SIZE OF THE DIVERTING CHANNEL OR OTHER CONDUIT THE PLACE AND MANNER OF USE AND THE LOCATION AND USE OF ALL OTHER STREAMS, WHICH ARE CROSSED OR CONNECTED WITH THE SAID WORKS ARE FULLY AND CORRECTLY DESIGNATED THEREON

ROBERT FULSTONE
STATE WATER RIGHT SURVEYOR
NEVADA CERTIFICATE NO. 639

2/22/96

BASIS OF BEARINGS

N 89° 10'00"W BEING THE NORTH LINE OF THE NORTHEAST ONE QUARTER (NE 1/4) OF SECTION 4, TOWNSHIP 23 SOUTH, RANGE 61 EAST, M.D.M. TOWNSHIP 23 SOUTH, RANGE 61 EAST, M.D.M. PER FILE 22, PAGE 15 OF SURVEYS

62003 CERTIFICATE No. 16251 ISSUED 11/17/03

SUBSCRIBED AND SWORN TO BEFORE ME THIS 22 DAY OF February 1996
MY COMMISSION EXPIRES APRIL 15, ~~1995~~ 1999

Lorna R McNeill
LORNA R. MCNEILL
NOTARY PUBLIC IN AND FOR SAID COUNTY AND STATE

LORNA R. McNEILL
NOTARY PUBLIC-STATE OF NEVADA
CLARK COUNTY
My Appt. Expires April 15, 1999

FULSTONE ENTERPRISES INC.
940 S. MARTIN LUTHER KING BLVD.
LAS VEGAS, NEVADA 89106 PHONE (702)382-8141

DWG# N5-8

STATE ENGINEER'S USE

1. "Of a portion" should be ignored per letter from Robert Fulstone dated 5-24-96 in the title block
GG.J. 5-30-96

FILED
APR 5 1996
STATE ENGINEER'S OFFICE

MAP TO ACCOMPANY APPLICATION FOR CHANGE OF PLACE OF USE AND POINT OF DIVERSION OF A PORTION OF PERMIT # 60644

BY: KIWI. A LIMITED LIABILITY CO.
FOR: QUASI-MUNICIPAL PURPOSES
FROM: AN UNDERGROUND SOURCE

62003