S1/2 NE1/4 SE1/4 & SE1/4 SE1/4
SECTION 21, T.15S., R.67E., M.D.M.

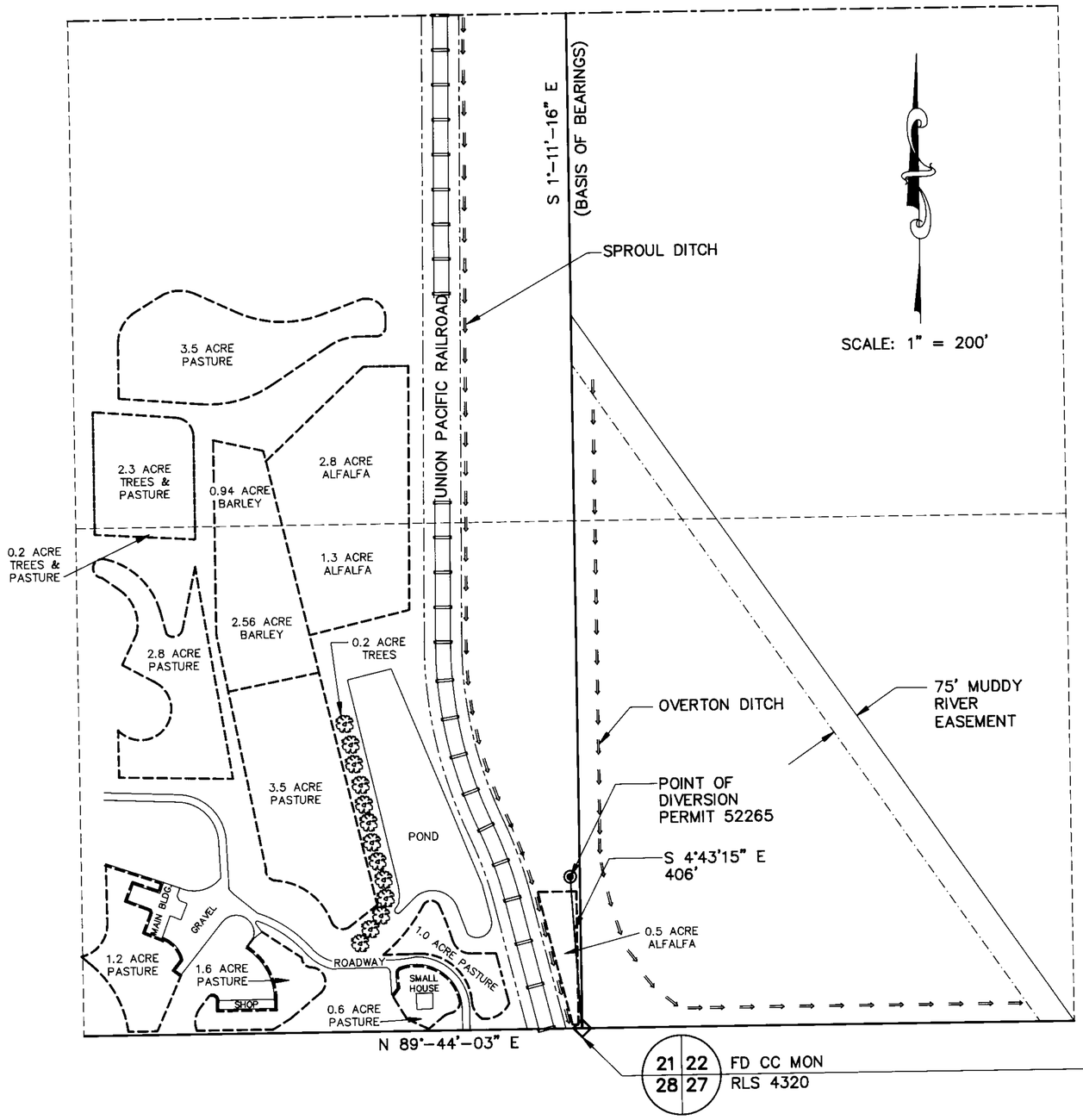

PROPOSED PLACE OF USE AND POINT OF DIVERSION

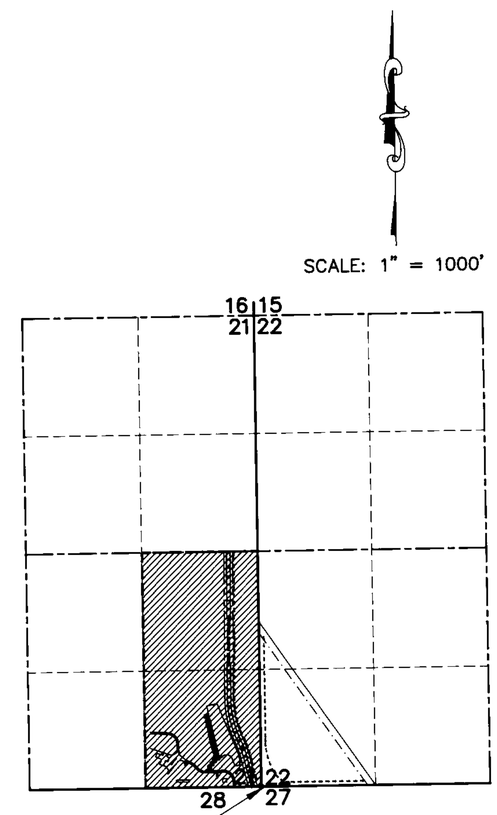

LOCATION MAP

BASIS OF BEARING:

S. 1°11'16" E., THE EAST LINE OF THE NE 1/4 SECTION 21, T.15S., R.67E., MDM PER RECORD OF SURVEY FILE 30, PAGE 98, CLARK COUNTY, NEVADA RECORDS.

STATE OF NEVADA }
COUNTY OF CLARK } SS

I, JAMES T. ANSPACH, BEING FIRST DULY SWORN, DEPOSE AND SAY THAT THIS MAP, CONSISTING OF ONE SHEET, HAS BEEN CORRECTLY DRAWN TO THE DESIGNATED SCALE FROM FIELD NOTES OF A SURVEY MADE BY ME ON THE 11TH DAY OF MAY, 1991; THAT IT TRULY AND CORRECTLY REPRESENTS THE PROPOSED LOCATION AND EXTENT OF THE WORKS USED TO DIVERT WATER FROM UNDERGROUND IN CLARK COUNTY, BY TOM ISOLA AND THE TAI ARABIAN RANCH FOR IRRIGATION AND DOMESTIC PURPOSES UNDER APPLICATION NO. 52265 THAT THE POINT OF DIVERSION, THE LOCATION, SIZE OF THE DIVERTING CHANNEL, LOCATION AND DESCRIPTION OF ALL MEASURING DEVICES, THE LOCATION AND EXTENT OF LANDS OWNED OR CONTROLLED BY THE APPLICANTS UPON WHICH WATER APPLIED FOR UNDER APPLICATION NO. 52265 IS USED, TOGETHER WITH THE AREA AND KIND OF CULTURE IN EACH 40-ACRE SUBDIVISION, AND THE LOCATION AND NAMES OF ALL OTHER WORKS OR STREAMS WHICH ARE CROSSED BY OR CONNECTED WITH SAID WORKS ARE FULLY AND CORRECTLY DESIGNATED THEREON.

James T. Anspach
STATE WATER RIGHT SURVEYOR NO. 563

SUBSCRIBED AND SWORN TO BEFORE ME THIS 30th DAY OF May, 1991

Betty J. Cannon
NOTARY PUBLIC IN AND FOR CLARK COUNTY, NV.

MY COMMISSION EXPIRES 1-25-93

Notary Public State Of Nevada
COUNTY OF CLARK
BETTY J. CANNON
My Appointment Expires
Jan 25, 1993

CULTURAL MAP TABULATION TABLE

SECTION	SUBDIVISION	TOWNSHIP	RANGE	CULTIVATED ACREAGE	DESCRIPTION OF CULTURE	DATE OF FIRST CULTURE
21	NE 1/4 SE 1/4	15 S	67 E	3.5 A	PASTURE	1988
21	NE 1/4 SE 1/4	15 S	67 E	2.3 A	TREES & PASTURE	1988
21	NE 1/4 SE 1/4	15 S	67 E	0.94 A	BARLEY	1988
21	NE 1/4 SE 1/4	15 S	67 E	2.8 A	ALFALFA	1988
21	SE 1/4 SE 1/4	15 S	67 E	0.2 A	TREES & PASTURE	1988
21	SE 1/4 SE 1/4	15 S	67 E	10.7 A	PASTURE	1988
21	SE 1/4 SE 1/4	15 S	67 E	2.56 A	BARLEY	1988
21	SE 1/4 SE 1/4	15 S	67 E	1.8 A	ALFALFA	1988
21	SE 1/4 SE 1/4	15 S	67 E	0.2 A	TREES	1988
				25.0 A	TOTAL	

CERTIFICATE No 13356 ISSUED 5-11-92

GRAPHIC SCALE

200 0 100 200 400 800
(IN FEET)
1 inch = 200ft.

1000 0 500 1000 2000 4000
(IN FEET)
1 inch = 1000ft.

RECEIVED
MAY 1991
Water Summary
Office

FILED
JUN 10 1991
STATE ENGINEER'S OFFICE

STATE ENG'R
'91 JUN 10 P4:11

MAP TO ACCOMPANY
PROOF OF BENEFICIAL USE
UNDER
PERMIT 52265
FOR IRRIGATION & DOMESTIC
PURPOSES
BY TOM ISOLA AND THE TAI ARABIAN RANCH
FROM AN UNDERGROUND SOURCE
IN CLARK COUNTY,NEVADA

52265