ACREAGE

SECTION	TOWNSHIP	RANGE	SUBDIVISION	CULTIVATED ACREAGE	DISCRIPTION OF CULTURE	DATE OF FIRST CULTURE	
36	20 N	30 E	SW1/4-SW1/4	2.67	ALFALFA	JULY 2, 1902	(1)
"	"	"	SE1/4-SW1/4	9.23	"	"	
TOTAL				11.90			

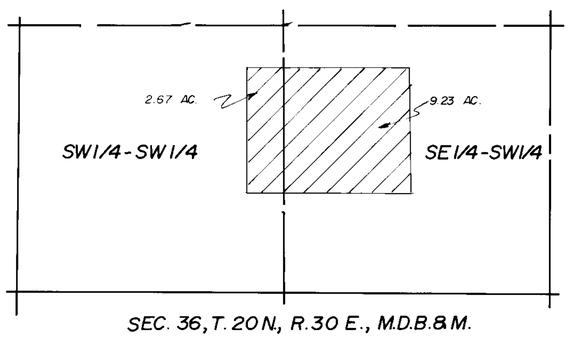

SEC. 36, T. 20 N, R. 30 E., M.D.B.&M.

SER NO. 2153

STATE OF NEVADA
COUNTY OF CHURCHILL } SS

I, BARRY A. FITZPATRICK BEING FIRST DULY SWORN, DEPOSE AND SAY THAT THIS MAP CONSISTING OF ONE SHEET HAS BEEN CORRECTLY DRAWN TO THE DESIGNATED SCALE FROM TRUCKEE-CARSON IRRIGATION DISTRICT RECORDS THAT IT TRULY AND CORRECTLY REPRESENTS THE LOCATION AND EXTENT OF THE WORKS USED TO DIVERT WATER FROM AN UNDER-GROUND SOURCE IN CHURCHILL COUNTY BY:

EDWARD W. & GRACE L. VIERA
APPLICANT

FOR IRRIGATION PURPOSES UNDER APPLICATION NO._____
THAT THE POINT OF DIVERSION, THE LOCATION, SIZE OF THE DIVERTING CHANNEL, LOCATION AND DESCRIPTION OF ALL MEASURING DEVICES, THE LOCATION AND EXTENT OF LANDS OWNED OR CONTROLLED BY THE APPLICANT UPON WHICH WATER APPLIED FOR UNDER SAID APPLICATION IS USED, TOGETHER WITH THE AREA AND KIND OF CULTURE IN EACH 40-ACRE SUBDIVISION, AND THE LOCATION AND NAMES OF ALL OTHER WORKS OR STREAMS WHICH ARE CROSSED BY OR CONNECTED WITH SAID WORKS ARE FULLY AND CORRECTLY DESIGNATED THEREON.

PROFESSIONAL LAND SURVEYOR 12/6/92 Nev. 7809

STATE WATER RIGHT SURVEYOR #817

SUBSCRIBED AND SWORN TO BEFORE ME THIS 27 July DAY OF 1992 NOTARY PUBLIC IN AND FOR CHURCHILL COUNTY, NEVADA.

NOTARY PUBLIC

NOTARY PUBLIC STATE OF NEVADA
My Appt. Expires Apr 21, 1995

I, THE UNDERSIGNED OWNER OF THE PROPOSED PLACE OF USE, DO HEREBY CERTIFY THAT I HAVE REVIEWED AND EXAMINED THIS PROOF OF BENEFICIAL USE MAP AND DO HEREBY CERTIFY IT TO BE CORRECT.

Edward W. Viera — 7-20-92
PROPERTY OWNER — DATE

NOTES:

(1.) SEE CARSON RIVER DECREE CIVIL NO. D-183 BRT AND TRUCKEE RIVER DECREE EQUITY DOCKET NO. A3 UNITED STATES DISTRICT COURT.

(2.) POINT OF DIVERSION IS LAHONTAN DAM AS STATED ON APPLICATION.

SCALE : 1" = 400'

0' 400' 800' 1200' 1600'

N

49397 CERTIFICATE NO. 14849 ISSUED 02-13-98

LUMOS & ASSOCIATES, INC.
Civil Engineers • Surveyors • Material Testing
197 Keddie Street, Fallon, NV 89406 (702) 423-2188

MAP

TO ACCOMPANY APPLICATION FOR PROOF OF BENEFICIAL USE UNDER PERMIT NO. 49397

BY : EDWARD W. & GRACE L. VIERA

FROM : TRUCKEE RIVER & CARSON RIVER

49397