ACREAGE

SECTION	TOWNSHIP	RANGE	SUBDIVISION	CULTIVATED ACREAGE	DESCRIPTION OF CULTURE	DATE OF FIRST CULTURE
26	19	28	SW¼ SE¼	2.44	PASTURE	JULY 2, 1902 (?)
TOTAL				2.44		

STATE OF NEVADA
COUNTY OF CHURCHILL SS

I, PAUL LUNDS BEING FIRST DULY SWORN, DEPOSE AND SAY THAT THIS MAP CONSISTING OF ONE SHEET HAS BEEN CORRECTLY DRAWN TO THE DESIGNATED SCALE FROM TRUCKEE-CARSON IRRIGATION DISTRICT RECORDS THAT IT TRULY AND CORRECTLY REPRESENTS THE LOCATION AND EXTENT OF THE WORKS USED TO DIVERT WATER FROM AN UNDERGROUND SOURCE IN CHURCHILL COUNTY BY:

MAURICE HANIFAN
APPLICANT

FOR IRRIGATION PURPOSES UNDER APPLICATION NO. 47875, THAT THE POINT OF DIVERSION, THE LOCATION, SIZE OF THE DIVERTING CHANNEL, LOCATION AND DESCRIPTION OF ALL MEASURING DEVICES, THE LOCATION AND EXTENT OF LANDS OWNED OR CONTROLLED BY THE APPLICANT UPON WHICH WATER APPLIED FOR UNDER SAID APPLICATION IS USED, TOGETHER WITH THE AREA AND KIND OF CULTURE IN EACH 40-ACRE SUBDIVISION, AND THE LOCATION AND NAMES OF ALL OTHER WORKS OR STREAMS WHICH ARE CROSSED BY OR CONNECTED WITH SAID WORKS ARE FULLY AND CORRECTLY DESIGNATED THEREON.

Paul Lunds
STATE WATER RIGHT SURVEYOR # 421

SUBSCRIBED AND SWORN TO BE BEFORE ME THIS 2nd DAY OF March 1988 NOTARY PUBLIC IN AND FOR CHURCHILL COUNTY, NEVADA.

Barry Fitzpatrick
NOTARY PUBLIC

BARRY FITZPATRICK
NOTARY PUBLIC NEVADA
CHURCHILL COUNTY
My Appointment Exp. 12-1991

I, THE UNDERSIGNED OWNER OF THE PROPOSED PLACE OF USE, DO HEREBY CERTIFY THAT I HAVE REVIEWED AND EXAMINED THIS PROOF OF BENEFICIAL USE MAP AND DO HEREBY CERTIFY IT TO BE CORRECT.

Maurice Hanifan
PROPERTY OWNER

18 March 88
DATE

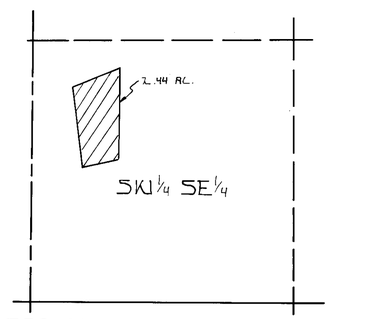

SEC. 26 T 19 N R 28 E MDB&M
SER 550-1-B

47875 16379 9-3-04

SCALE: 1" = 400'
0' 400' 800' 1200' 1600'

N

NOTES:

1. SEE CARSON RIVER DECREE CIVIL NO. D-183 BRT AND TRUCKEE RIVER DECREE EQUITY DOCKET NO. A-3 UNITED STATES DISTRICT COURT
2. THE POINT OF DIVERSION IS LAHONTAN DAM AS STATED ON APPLICATION NO. 47875

FILED
APR 19 1988

LUMOS & ASSOCIATES, INC.
Civil Engineers · Surveyors · Materials Testing
625 Fairview Dr., Ste. 102, Carson City, Nv. 89701
(702) 883-7077
590 W. Williams Ave., Fallon, Nv. 89406
(702) 423-2188

MAP
TO ACCOMPANY APPLICATION
FOR
PROOF OF BENIFICIAL USE UNDER
PERMIT NO. 47875

BY MAURICE HANIFAN

FROM TRUCKEE RIVER & CARSON RIVER

47875