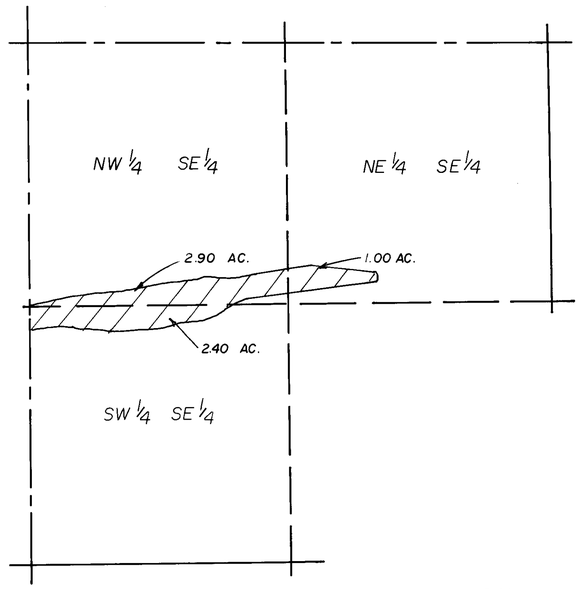

SEC. 21, T. 20 N., R. 25 E., M.D.B. & M.
SER. #1071

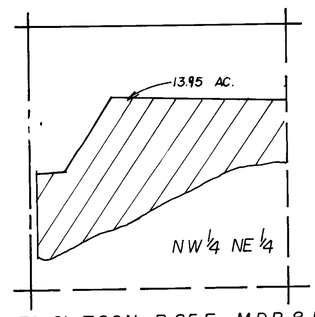

SEC. 21, T. 20 N., R. 25 E., M.D.B. & M.
SER. #1069

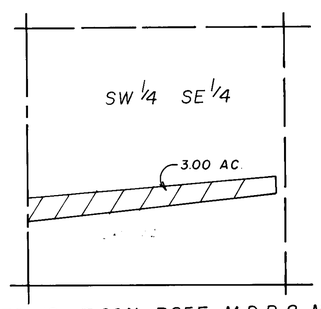

SEC. 19, T. 20 N., R. 25 E., M.D.B. & M.
SER. #1053

ACREAGE

SECTION	TOWNSHIP	RANGE	SUBDIVISION	CULTIVATED ACREAGE	DESCRIPTION OF CULTURE	DATE OF FIRST CULTURE
21	20 N	25 E	NE 1/4 - SE 1/4	1.00	ALFALFA	JULY 2, 1902 (1.)
"	"	"	NW 1/4 - SE 1/4	2.90	"	"
"	"	"	SW 1/4 - SE 1/4	2.40	"	"
"	"	"	NW 1/4 - NE 1/4	13.95	"	"
19	20 N	25 E	SW 1/4 - SE 1/4	3.00	"	"
TOTAL				23.25		

STATE OF NEVADA
COUNTY OF CHURCHILL SS

I, BARRY A. FITZPATRICK BEING FIRST DULY SWORN, DEPOSE AND SAY THAT THIS MAP CONSISTING OF ONE SHEET HAS BEEN CORRECTLY DRAWN TO THE DESIGNATED SCALE FROM TRUCKEE-CARSON IRRIGATION DISTRICT RECORDS THAT IT TRULY AND CORRECTLY REPRESENTS THE LOCATION AND EXTENT OF THE WORKS USED TO DIVERT WATER FROM AN UNDERGROUND SOURCE IN LYON COUNTY BY:

JOHN PICETTI
APPLICANT

FOR IRRIGATION PURPOSES UNDER APPLICATION NO. 47849 THAT THE POINT OF DIVERSION, THE LOCATION, SIZE OF THE DIVERTING CHANNEL, LOCATION AND DESCRIPTION OF ALL MEASURING DEVICES, THE LOCATION AND EXTENT OF LANDS OWNED OR CONTROLLED BY THE APPLICANT UPON WHICH WATER APPLIED FOR UNDER SAID APPLICATION IS USED, TOGETHER WITH THE AREA AND KIND OF CULTURE IN EACH 40-ACRE SUBDIVISION, AND THE LOCATION AND NAMES OF ALL OTHER WORKS OR STREAMS WHICH ARE CROSSED BY OR CONNECTED WITH SAID WORKS ARE FULLY AND CORRECTLY DESIGNATED THEREON.

Barry A. Fitzpatrick
STATE WATER RIGHT SURVEYOR #817.

SUBSCRIBED AND SWORN TO BE BEFORE ME THIS 14th DAY OF April 1988, NOTARY PUBLIC IN AND FOR CHURCHILL COUNTY, NEVADA.

Margaret L. DePusha
NOTARY PUBLIC

MARGARET L. DePUSHA
Notary Public - State of Nevada
MY APPOINTMENT EXPIRES APRIL 11, 1990

I, THE UNDERSIGNED OWNER OF THE PROPOSED PLACE OF USE, DO HEREBY CERTIFY THAT I HAVE REVIEWED AND EXAMINED THIS PROOF OF BENEFICIAL USE MAP AND DO HEREBY CERTIFY IT TO BE CORRECT.

John Picetti
PROPERTY OWNER

4/14/88
DATE

NOTES:

(1.) SEE CARSON RIVER DECREE CIVIL NO. D-183 BRT AND TRUCKEE RIVER DECREE EQUITY DOCKET NO. A3 UNITED STATES DISTRICT COURT.

(2.) POINT OF DIVERSION IS DERBY DAM AS STATED ON APPLICATION.

SCALE: 1" = 400'

0' 400' 800' 1200' 1600'

N

FILED
MAY 18 1988
STATE ENGINEER'S OFFICE

47849 CERTIFICATE No 15154 ISSUED 03/02/99

CERT #
15154

LUMOS & ASSOCIATES, INC.
Civil Engineers · Surveyors · Materials Testing
625 Fairview Dr., Ste. 102, Carson City, Nv. 89701
(702) 883-7077
590 W. Williams Ave., Fallon, Nv. 89406
(702) 423-2188

MAP
TO ACCOMPANY APPLICATION
FOR
PROOF OF BENIFICIAL USE UNDER
PERMIT NO. 47849

BY JOHN PICETTI

FROM TRUCKEE RIVER

74183 73255 47849

47849