ACREAGE

SECTION	TOWNSHIP	RANGE	SUBDIVISION	CULTIVATED ACREAGE	DESCRIPTION OF CULTURE	DATE OF FIRST CULTURE
8	18 N	29 E	SW1/4-SE 1/4	7.60	ALFALFA	JULY 2, 1902 (1.)
			TOTAL	7.60		

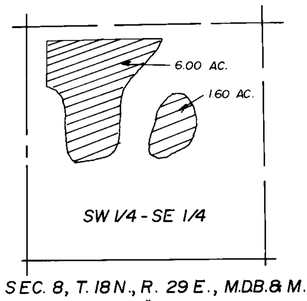

SEC. 8, T. 18 N., R. 29 E., M.D.B.& M.
SER. *227

STATE OF NEVADA
COUNTY OF CHURCHILL SS

I, BARRY A. FITZPATRICK BEING FIRST DULY SWORN, DEPOSE AND SAY THAT THIS MAP CONSISTING OF ONE SHEET HAS BEEN CORRECTLY DRAWN TO THE DESIGNATED SCALE FROM TRUCKEE-CARSON IRRIGATION DISTRICT RECORDS THAT IT TRULY AND CORRECTLY REPRESENTS THE LOCATION AND EXTENT OF THE WORKS USED TO DIVERT WATER FROM AN UNDERGROUND SOURCE IN CHURCHILL COUNTY BY:

YANACIO LACA
APPLICANT

FOR IRRIGATION PURPOSES UNDER APPLICATION NO. 47833 THAT THE POINT OF DIVERSION, THE LOCATION, SIZE OF THE DIVERTING CHANNEL, LOCATION AND DESCRIPTION OF ALL MEASURING DEVICES, THE LOCATION AND EXTENT OF LANDS OWNED OR CONTROLLED BY THE APPLICANT UPON WHICH WATER APPLIED FOR UNDER SAID APPLICATION IS USED, TOGETHER WITH THE AREA AND KIND OF CULTURE IN EACH 40-ACRE SUBDIVISION, AND THE LOCATION AND NAMES OF ALL OTHER WORKS OR STREAMS WHICH ARE CROSSED BY OR CONNECTED WITH SAID WORKS ARE FULLY AND CORRECTLY DESIGNATED THEREON.

Barry A. Fitzpatrick
STATE WATER RIGHT SURVEYOR #817

SUBSCRIBED AND SWORN TO BE BEFORE ME THIS 17th DAY OF 1989.
NOTARY PUBLIC IN AND FOR CHURCHILL COUNTY, NEVADA.

Sheldon D. Quinn
NOTARY PUBLIC

SHELDON D. QUINN
NOTARY PUBLIC - NEVADA
CHURCHILL COUNTY
My Appt. Expires July 25, 1992

I, THE UNDERSIGNED OWNER OF THE PROPOSED PLACE OF USE, DO HEREBY CERTIFY THAT I HAVE REVIEWED AND EXAMINED THIS PROOF OF BENEFICIAL USE MAP AND DO HEREBY CERTIFY IT TO BE CORRECT.

Ygnacio Laca — 5-16-89
PROPERTY OWNER — DATE

NOTES:

(1.) SEE CARSON RIVER DECREE CIVIL NO. D-183 BRT AND TRUCKEE RIVER DECREE EQUITY DOCKET NO. A3 UNITED STATES DISTRICT COURT.

(2.) POINT OF DIVERSION IS LAHONTAN DAM AS STATED ON APPLICATION.

N

SCALE: 1" = 400'

0' 400' 800' 1200' 1600'

47833 CERTIFICATE No 15076 SSUE 12-21-98

FILED

CERT #
15076

LUMOS & ASSOCIATES, INC
Civil Engineers · Surveyors · Materials Testing
625 Fairview Dr., Ste. 102, Carson City, Nv. 89701
(702) 883-7077
590 W. Williams Ave., Fallon, Nv. 89406
(702) 423-2188

MAP
TO ACCOMPANY APPLICATION
FOR
PROOF OF BENIFICIAL USE UNDER
PERMIT NO. 47833

BY YGNACIO LACA

FROM TRUCKEE RIVER & CARSON RIVER

47833